RCC DOCUMENT 118-12
VOLUME 2

TELEMETRY GROUP

TEST METHODS FOR TELEMETRY SYSTEMS AND SUBSYSTEMS

VOLUME 2

TEST METHODS FOR TELEMETRY RADIO FREQUENCY (RF) SUBSYSTEMS

ABERDEEN TEST CENTER
DUGWAY PROVING GROUND
REAGAN TEST SITE
WHITE SANDS MISSILE RANGE
YUMA PROVING GROUND

NAVAL AIR WARFARE CENTER AIRCRAFT DIVISION, PATUXENT RIVER
NAVAL AIR WARFARE CENTER WEAPONS DIVISION, CHINA LAKE
NAVAL AIR WARFARE CENTER WEAPONS DIVISION, POINT MUGU
NAVAL UNDERSEA WARFARE CENTER DIVISION, KEYPORT
NAVAL UNDERSEA WARFARE CENTER DIVISION, NEWPORT
PACIFIC MISSILE RANGE FACILITY

30th SPACE WING
45th SPACE WING
96th TEST WING
412th TEST WING
ARNOLD ENGINEERING DEVELOPMENT CENTER

NATIONAL AERONAUTICS AND SPACE AMINISTRATION

DISTRIBUTION A: APPROVED FOR PUBLIC RELEASE
DISTRIBUTION IS UNLIMITED

This page intentionally left blank.

DOCUMENT 118-12

TEST METHODS FOR TELEMETRY SYSTEMS AND SUBSYSTEMS

VOLUME 2

TEST METHODS FOR TELEMETRY RADIO FREQUENCY (RF) SUBSYSTEMS

SEPTEMBER 2012

Prepared by

TELEMETRY GROUP
RANGE COMMANDERS COUNCIL

Published by

Secretariat
Range Commanders Council
U.S. Army White Sands Missile Range
New Mexico 88002

This page intentionally left blank.

TABLE OF CONTENTS

CHAPTER 1 TEST PROCEDURES FOR TELEMETRY ANTENNA SYSTEMS 1-1

1.0 Pedestal Drive System Characteristics 1-1
1.1 TEST: Rate Loop 1-2
1.2 TEST: Position Loop Calibration 1-6
1.3 TEST: Position Loop 1-9
1.4 TEST: Velocity and Acceleration Measurement: Strip Chart Recorder 1-12
1.5 TEST: Tracking Error Voltage Gradient 1-16
1.6 TEST: Dynamic Tracking Accuracy 1-20
1.7 TEST: Antenna Bore sight 1-23
1.8 TEST: Antenna Gain 1-25
1.9 TEST: Antenna Pattern Test 1-30
1.10 TEST: Feed Assembly Unit 1-33
1.11 TEST: Solar Calibration using Linear Receiver Method 1-36
1.12 TEST: Solar Calibration using Attenuator Method 1-41

CHAPTER 2 TEST PROCEDURES FOR TELEMETRY RF PREAMPLIFIERS 2-1

2.0 General 2-1
2.1 TEST: Amplifier Gain Compression 2-2
2.2 TEST: Bandwidth and Small Signal Power Gain 2-6
2.3 TEST: Intermodulation (IM) Products and Intercept Point (IP) 2-10
2.4 TEST: Voltage Standing Wave Ratio (VSWR) by Return Loss Method 2-16
2.5 TEST: Noise Figure (NF) using Automatic Noise Figure Meter 2-20
2.6 TEST: Impedance Mismatch 2-22

CHAPTER 3 TEST PROCEDURES FOR TELEMETRY MULTICOUPLERS 3-1

3.0 General 3-1
3.1 TEST: Multicoupler Gain Compression 3-1
3.2 TEST: Bandwidth and Small Signal Power Gain 3-5
3.3 TEST: Intermodulation (IM) Products Intercept Point (IP) 3-9
3.4 TEST: VSWR by Return Loss Method 3-16
3.5 TEST: Noise Figure 3-22
3.6 TEST: Output Isolation 3-25

CHAPTER 4 TEST PROCEDURES FOR TELEMETRY RECEIVERS 4-1

4.0 General 4-1
4.1 TEST: Spurious Signal Response 4-3
4.2 TEST: Noise Figure 4-6
4.3 TEST: Intermediate Frequency Signal-to-Noise Ratio (IF SNR) Linearity Test 4-8
4.4 TEST: AGC Static 4-11
4.5 TEST: AGC Dynamic Test - Response to Square Wave 4-15
4.6 TEST: AGC Dynamic Test - Response to Sine Wave 4-21
4.7 TEST: FM Capture Ratio 4-25
4.8 TEST: Noise Power Ratio (NPR) 4-29
4.9 TEST: Local Oscillator (LO) Radiation 4-36

4.10 TEST: Local Oscillator (LO) Stability 4-39
4.11 TEST: Pulse Code Modulation Bit Error Rate 4-43
4.12 TEST: Frequency Modulation Step Response 4-47
4.13 TEST: Receiver Band Pass Frequency Response using Unmodulated Signal 4-50
4.14 TEST: Receiver Band Pass Frequency Response using Phase-Modulated Signal 4-54
4.15 TEST: Receiver Band Pass Frequency Response using White Noise Input. 4-59
4.16 TEST: Data Frequency Response 4-62
4.17 TEST: Automatic Gain Control Stability 4-65
4.18 TEST: Receiver Video Spurious Outputs 4-67
4.19 TEST: Predetection Carrier Output 4-70
4.20 TEST: FM Receiver DC Linearity and Deviation Sensitivity 4-73
4.21 TEST: Receiver Phase Noise 4-77
4.22 TEST: Receiver Adjacent Channel Interference 4-80

CHAPTER 5 TEST PROCEDURES FOR DIVERSITY COMBINERS 5-1
5.0 General 5-1
5.1 TEST: Diversity Combiner Static Evaluation with Equal RF Signal Strengths 5-2
5.2 TEST: Diversity Combiner Static Evaluation with Unequal RF Signal Strengths 5-7
5.3 TEST: Diversity Combiner Dynamic Evaluation with In-Phase Fading and Equal RF Signal Strengths 5-11
5.4 TEST: Diversity Combiner Dynamic Evaluation with Periodic In-Phase Fading and Unequal RF Signal Strengths 5-18
5.5 TEST: Diversity Combiner Dynamic Evaluation with Periodic Out-of-phase Fading and Equal RF Signal Strengths 5-22
5.6 TEST: Diversity Combiner Dynamic Evaluation with Periodic Out-of-Phase Fading and Unequal RF Signal Strengths 5-24
5.7 TEST: Diversity Combiner Break Frequency 5-27
5.8 TEST: Diversity Combiner Evaluation with Random Fading 5-29
5.9 TEST: Predetection Combiner Band Pass Frequency Response using Phase-Modulated Signal 5-31
5.10 TEST: Predetection Combiner Band Pass Frequency Response using Unmodulated Signal 5-35
5.11 TEST: Combiner Data Frequency Response 5-38
5.12 TEST: Combiner Predetection Carrier Output 5-42

CHAPTER 6 TEST PROCEDURES FOR TELEMETRY DOWNCONVERTERS 6-1
6.0 General 6-1
6.1 TEST: Gain Compression and Saturation Level 6-2
6.2 TEST: Bandwidth and Passband Gain Characteristics 6-5
6.3 TEST: Intermodulation Products and Intercept Point 6-8
6.4 TEST: Voltage Standing Wave Ratio 6-13
6.5 TEST: Noise Figure 6-16
6.6 TEST: Channel Isolation 6-19

6.7 TEST: Spurious Signal 6-22
6.8 TEST: Image Rejection..... 6-24
6.9 TEST: Local Oscillator Frequency Accuracy and Stability 6-27
6.10 TEST: Local Oscillator Radiation Test..... 6-30

CHAPTER 7 TEST PROCEDURES FOR PCM/FM, SOQPSK-TG, FQPSK-B, FQPSK-JR, AND ARTM CPM DEMODULATORS 7-1
7.1 TEST: Demodulator Bit Error Probability versus Eb/N0 7-1
7.2 TEST: Reacquisition and Synchronization Loss Thresholds..... 7-6
7.3 TEST: Bit Rate and Input Frequency Tracking 7-8
7.4 TEST: Demodulator Acquisition Time and Flat Fade Recovery Time. 7-10
7.5 TEST: Demodulator Adjacent Channel Interference Test. 7-14
7.6 TEST: PCM/FM Demodulator Modulation Index Sensitivity Test..... 7-17

APPENDIX A. INTERMODULATION (IM) PRODUCTS AND INTERCEPT POINT A-1

APPENDIX B. NOISE FIGURE MEASUREMENTS B-1

APPENDIX C. SOLAR CALIBRATION C-1

REFERENCES

INDEX OF TESTS

This page intentionally left blank.

LIST OF FIGURES

Figure I-1.	RF/system measurements and data flow diagram.	I-2
Figure 1-1.	Rate loop servo test block diagram (see test 1.1)	1-3
Figure 1-2.	Calibration setup for Test 1.2	1-6
Figure 1-3.	Position loop servo test block diagram (see test 1.3).	1-9
Figure 1-4.	Strip chart recorder velocity servo test block diagram (see test 1.4).	1-12
Figure 1-5.	Velocity and acceleration (see test 1.4).	1-14
Figure 1-6.	Tracking error gradient test block diagram (see test 1.5).	1-16
Figure 1-7.	Tracking error gradient linearity slope for 1 Vdc/degree (see test 1.5).	1-18
Figure 1-8.	Antenna gain measurement using XY plotter (see test 1.8)	1-26
Figure 1-9.	Antenna gain measurement using a strip chart recorder (test 1.8, method 2).	1-27
Figure 1-10.	Antenna pattern measurement setup (see test 1.9).	1-31
Figure 1-11.	SCM error pulses indicating minimum error (see test 1.10)	1-34
Figure 1-12.	SCM error signals indicating azimuth and elevation errors for one type of SCM feed (see test 1.10)	1-34
Figure 1-13.	CST error and reference signals alignment (see test 1.10.3).	1-35
Figure 1-14.	Antenna solar calibration using linear receiver (see test 1.11).	1-36
Figure 1-15.	Antenna solar calibration using attenuator (see test 1.12).	1-41
Figure 2-1.	Test setup for measurement of amplifier gain compression (see test 2.1.3).	2-2
Figure 2-2.	Amplifier gain compression (see test 2.1).	2-5
Figure 2-3.	Test setup for measurement of bandwidth and small signal power gain (see test 2.2).	2-6
Figure 2-4.	Plot of power gain and bandwidth versus frequency (see test 2.2).	2-9
Figure 2-5.	Test setup for determination of intercept point (see test 2.3).	2-10
Figure 2-6.	Typical display of fundamental and third-order IM products (see test 2.3).	2-12
Figure 2-7.	Graphical illustration of intercept point (see test 2.3)	2-14
Figure 2-8.	Spurious response nomograph (see test 2.3).	2-15
Figure 2-9.	Test setup for measurement of return loss (VSWR) (see test 2.4)	2-17
Figure 2-10.	Noise figure using automatic noise figure meter (see test 2.5).	2-20
Figure 2-11.	Impedance mismatch test setup (see test 2.6).	2-22
Figure 3-1.	Test setup for measurement of multicoupler gain compression level (see test 3.1).	3-2
Figure 3-2.	Multicoupler gain compression (see tests 3.1 and 3.3).	3-3
Figure 3-3.	Test setup for measurement of bandwidth and small signal power gain (see test 3.2).	3-6
Figure 3-4.	Plot of power gain and bandwidth versus frequency (see test 3.2).	3-8
Figure 3-5.	Test setup for determination of intercept point (see test 3.3).	3-9
Figure 3-6.	Typical display of fundamental and third-order intermodulation products (see test 3.3).	3-11
Figure 3-7.	Graphical illustration of intercept point (see test 3.3)	3-12
Figure 3-8.	Spurious response nomograph (see test 3.3).	3-15
Figure 3-9a.	Test setup for measurement of return loss (VSWR) (see test 3.4)	3-17
Figure 3-9b.	Alternate test setup for measurement of return loss (VSWR) (see test 3.4)	3-17

Figure 3-10a.	Test setup for measurement of noise figure (see test 3.5).....	3-22
Figure 3-10b.	Test setup for measurement of noise figure (see test 3.5).....	3-23
Figure 3-11.	Output isolation (see test 3.6).	3-25
Figure 4-1.	Receiver spurious signal response test (see tests 4.1 and 4.3).	4-3
Figure 4-2.	Noise figure plot (see test 4.2).	4-6
Figure 4-3.	AGC static test (see test 4-4).	4-11
Figure 4-4.	AGC characteristics and IF level control (see test 4-4).	4-13
Figure 4-5.	AGC response to square wave amplitude modulation (see test 4.5).....	4-16
Figure 4-6.	AGC response to sine wave AM (see test 4.6).	4-22
Figure 4-7.	Capture ratio test (see test 4.7).....	4-25
Figure 4-8.	NPR standard test setup (see test 4.8)..	4-30
Figure 4-9.	Curve for converting NPR and NPRF data to NPRI (see test 4.8).	4-33
Figure 4-10.	Noise power ratio (see test 4.8).....	4-34
Figure 4-11.	Local oscillator radiation test (see test 4.9).	4-36
Figure 4-12.	Local oscillator stability test (see test 4.10)..	4-39
Figure 4-13.	Receiver PCM bit error rate (see test 4.11).....	4-44
Figure 4-14.	Receiver frequency modulation step response (see test 4.12).	4-47
Figure 4-15.	Receiver band pass response using unmodulated signal (see test 4.13).	4-50
Figure 4-16.	Receiver band pass response using phase-modulated signal (see test 4.14).	4-54
Figure 4-17.	Receiver band pass response using white noise (see test 4.15).	4-59
Figure 4-18.	Receiver data frequency response (see test 4.16).	4-62
Figure 4-19.	Receiver AGC stability (see test 4.17).....	4-65
Figure 4-20.	Receiver video spurious outputs (see test 4.18).....	4-68
Figure 4-21.	Receiver predetection carrier output (see test 4.19).....	4-70
Figure 4-22.	FM receiver dc linearity and deviation sensitivity (see test 4.18).	4-74
Figure 4-23.	Test setup for receiver phase noise test.....	4-78
Figure 4-24.	Test setup for adjacent channel interference test.	4-81
Figure 5-1.	Static evaluation test setup for diversity signal combiner (see tests 5.1 and 5.2)..	5-3
Figure 5-2.	Dynamic evaluation test setup for diversity signal combiner (see tests 5.3, 5.4, 5.5, 5.6, 5.7, and 5.8)..	5-12
Figure 5-3.	Diversity signal simulator (see tests 5.3, 5.4, 5.5, 5.6 and 5.7)	5-13
Figure 5-4.	Phase-shifter modulation and receiver-AGC voltage (see tests 5.3, 5.4, 5.5, 5.6, and 5.7).	5-15
Figure 5-5.	Combiner band pass response using phase-modulated signal (see test 5.9).	5-31
Figure 5-6.	Combiner band pass response using unmodulated signal (see test 5.10). ...	5-35
Figure 5-7.	Combiner data frequency response (see test 5.11).....	5-39
Figure 5-8.	Combiner predetection carrier output (see test 5.12)..	5-42
Figure 6-1.	Downconverter gain compression and saturation level test setup (see test 6.1).	6-2
Figure 6-2.	Downconverter bandwidth and passband gain characteristics (see test 6.2).	6-5
Figure 6-3.	Intermodulation products and intercept point test setup (see test 6.3).....	6-8
Figure 6-4.	Downconverter intermodulation products (see test 6.3)..	6-11
Figure 6-5.	Downconverter VSWR test setup (see test 6.4)..	6-13
Figure 6-6.	Downconverter noise figure test setup (see test 6.5).	6-16

Figure 6-7. Downconverter channel isolation test setup (see test 6.6). 6-19
Figure 6-8. Downconverter spurious signal generation (see test 6.7). 6-22
Figure 6-9. Image rejection test setup (see test 6.8). 6-24
Figure 6-10. Local oscillator frequency accuracy and stability (see test 6.9). 6-27
Figure 6-11. Local oscillator radiation test (see test 6.10). 6-30
Figure 7-1. Test setup for demodulator bit error probability tests..... 7-3
Figure 7-2. Alternate setup for demodulator bit error probability test. ..... **Error! Bookmark not**
Figure 7-3. Test setup for demodulator acquisition time and flat fade recovery tests.... 7-12
Figure 7-4. Test setup for adjacent channel interference test. 7-15
Figure 7-5. Test setup for modulation index sensitivity test 7-17
Figure A-1. Illustration of spectrum for two fundamental frequencies, f1 and f2, with second- and third-order response A-3
Figure A-2. Graphical representation of intercept point..... A-5
Figure B-1. Receiving system with filter before the preamplifier. B-3
Figure B-2. Receiving system with filter after preamplifier. B-4
Figure B-3. Noise figure measurement using telemetry receiver..... B-7
Figure B-4. Noise figure using filter, mixer, and oscillator. B-7
Figure C-1. Block diagram for system linearity test. C-5
Figure C-2. IF SNR versus attenuation. C-6

LIST OF TABLES

Table 1-1. Test Matrix for Telemetry Antenna Systems..... 1-2
Table 2-1. Test Matrix for Telemetry Rf Preamplifiers 2-1
Table 2-2. Return Loss to Equivalent VSWR 2-19
Table 3-1. Test Matrix for Telemetry Multicouplers 3-1
Table 3-2. Return Loss to Equivalent VSWR 3-21
Table 4-1. Test Matrix for Telemetry Receivers 4-2
Table 4-2. PCM Peak Deviation for Various PCM Codes and Demodulator Types 4-43
Table 5-1. Test Matrix for Diversity Combiners..... 5-1
Table 6-1. Test Matrix for Telemetry Downconverters 6-1
Table 7-1. Test Matrix for Telemetry Demodulators 7-1

LIST OF DATA SHEETS

DATA SHEET NO. **Page**

CHAPTER 1 - TEST PROCEDURES FOR TELEMETRY ANTENNA SYSTEMS

1-1 Pedestal drive system characteristics: rate loop test 1-5
1-2 Position loop calibration: position loop test servo bandwidth amplifiers... 1-8
1-3 Pedestal drive system characteristics: position loop test 1-11
1-4 Pedestal drive system characteristics: velocity and acceleration..... 1-15
1-5 Tracking error voltage gradient 1-19
1-6 Dynamic tracking accuracy..... 1-22
1-7 Antenna bore sight test..... 1-24
1-8 Antenna gain test..... 1-29
1-9 Solar calibration using linear receiver method 1-40
1-10 Solar calibration using attenuator method 1-43

CHAPTER 2 - TEST PROCEDURES FOR TELEMETRY RF PREAMPLIFIERS

2-1 Amplifier gain compression method two: power meter measurement 2-6
2-2 Bandwidth and small signal power gain including temperature and supply voltage variations..... 2-10
2-3 Intermodulation products and intercept point..... 2-15
2-4 VSWR by return to loss method including temperature variations 2-20
2-5 Noise figure using automatic noise figure meter 2-25
2-6 Impedance mismatch 2-23

CHAPTER 3 - TEST PROCEDURES FOR TELEMETRY MULTICOUPLERS

3-1 Multicoupler gain compression test..... 3-4
3-2 Bandwidth and small signal power gain including temperature and supply 3-7
3-3 Intermodulation products and intercept point..... 3-13
3-4 VSWR by return loss method including temperature variations 3-20
3-5 Noise figure..... 3-24
3-6 Output isolation..... 3-27

CHAPTER 4 - TEST PROCEDURES FOR TELEMETRY RECEIVERS

4-1 Spurious signal response..... 4-5
4-2 Noise figure..... 4-7
4-3 IF SNR 4-10
4-4 AGC status test 4-14
4-5 AGC dynamic test - response to square wave 4-19
4-6 AGC dynamic test - response to sine wave 4-24
4-7 FM capture ratio test 4-28
4-8 Noise power ratio..... 4-35
4-9 Local oscillator (LO) radiation test..... 4-38
4-10 Local oscillator (LO) stability test (crystal mode)..... 4-41
4-11 Pulse code modulation bit error rate 4-46
4-12 Frequency modulation step response 4-51
4-13 Receiver band pass frequency response using unmodulated signal..... 4-55

4-14 Receiver band pass frequency response using a phase modulated signal.... 4-57
4-15 Receiver band pass frequency response using white noise input 4-61
4-16 Data frequency response 4-64
4-17 Automatic gain control stability 4-66
4-18 Receiver video spurious outputs 4-69
4-19 Predetection carrier output 4-72
4-20 FM receiver dc linearity and deviation sensitivity 4-76
4-21 Receiver phase noise test 4-79
4-22 Adjacent channel interference 4-82

CHAPTER 5 – TEST PROCEDURES FOR DIVERSITY COMBINERS

5-1 Static, equal RF signal strength 5-6
5-2(1) Static, unequal RF signal strength 5-9
5-2(2) Static, unequal RF signal strength 5-10
5-3 Dynamic, equal RF signal strength (in-phase fading) 5-17
5-4(1) Dynamic, equal RF signal strength (in-phase fading) 5-20
5-4(2) Dynamic, equal RF signal strength (in-phase fading) 5-21
5-5 Dynamic, equal RF signal strength (out-of-phase fading) 5-23
5-6(1) Dynamic, unequal RF signal strength (out-of-phase fading, 180°) 5-25
5-6(2) Dynamic, unequal RF signal strength (out-of-phase fading, 180°) 5-26
5-7 Dynamic, break frequency 5-28
5-8 Diversity Combiner Evaluation with Random Fading 5-30
5-9 Predetection combiner band pass frequency response using PM-modulated signal 5-34
5-10 Predetection combiner band pass frequency response using unmodulated signal 5-37
5-11 Combiner data frequency response 5-41
5-12 Combiner predetection carrier output 5-44

CHAPTER 6 - TEST PROCEDURES FOR TELEMETRY DOWNCONVERTERS

6-1 Gain compression and saturation level 6-4
6-2 Bandwidth and passband gain characteristics 6-7
6-3 Intermodulation products and intercept point 6-12
6-4 Voltage standing wave ratio 6-15
6-5 Noise figure 6-18
6-6 Channel isolation 6-21
6-7 Spurious signal generation 6-23
6-8 Image rejection 6-26
6-9 Local oscillator frequency accuracy and stability 6-29
6-10 Local oscillator radiation test 6-32

CHAPTER 7 - TEST PROCEDURES FOR RF TELEMETRY COMPONENTS & SYSTEMS THAT EMPLOY PCM/FM, SOQPSK-TG//FQPSK-JR, AND ARTM CPM MODULATION/DEMODULATION

7-1 Bit error probability versus Eb/N0 7-5
7-2 Acquisition and synchronization loss thresholds versus Eb/N0 7-7

7-3 Bit error rate and input frequency tracking 7-9
7-4 Demodulator acquisition time and flat fade recovery time 7-13
7-5 Adjacent channel interference 7-16
7-6 PCM/FM Demodulator Modulation Index Sensitivity Test … 7-19

PREFACE

This document presents the results of efforts undertaken by the Range Commanders Council (RCC) Telemetry Group Radio Frequency (RF) Systems Committee for completion of Task TG-095, *Test Methods for Telemetry Systems and Subsystems, Volume 2, Test Methods for Telemetry RF Subsystems.*

It is the intent to provide commonality for testing methodology of all Major Range and Test Facility Base (MRTFB) and National Aeronautics and Space Administration (NASA) facilities. Future reference to MRTFB is assumed to include NASA facilities. Compliance with the test requirements in this document will eliminate confusion of testing requirements between MRTFB facilities.

For development of this document, the RCC gives special recognition to:

Task Lead: Mr. Robert W. Selbrede
Air Force Flight Test Center
JT3 Contractor
412 TW/DRP
307 E. Popson Ave
Edwards Air Force Base, California 93523
(661) 277-1179
DNS 527-1179
E-mail: robert.selbrede.ctr@edwards.af.mil

Please address any questions to:

Secretariat, Range Commanders Council
ATTN: TEDT-WS-RCC
100 Headquarters Avenue
White Sands Missile Range, New Mexico 88002-5110
Phone: (575) 678-1107 DSN 258-1107
Fax: (575) 678-9517 DSN 258-9517
E-mail: usarmy.wsmr.atec.list.rcc@mail.mil

This page intentionally left blank.

ACRONYMS AND INITIALISMS

ac	alternating current
AFB	Air Force Base
AGC	automatic gain control
AM	amplitude modulation
ARTM CPM	Advanced Range Telemetry Continuous Phase Modulation
Az	azimuth
BER	bit error rate
BW	bandwidth
ccw	counterclockwise
CST	conical scan technique
cw	clockwise
dB	decibel
dBi	decibels referenced to isotropic radiator
dc	direct current
deg	degree
El	elevation
ENPBW	equivalent noise power bandwidth
ENR	excess noise ratio
FAU	feed assembly unit
FQPSK JR	Feher-patented Quadrature Phase Shift Keying Jefferis-Rich
G	gain
G/T	gain/temperature
Hz	hertz
IF	intermediate frequency
IM	intermodulation
IP	intercept point
IRIG	Inter-range Instrumentation Group
kHz	kilohertz
LCP	left circular polarization
LO	local oscillator
m	meter
mm	millimeter
MGC	manual gain control
MHz	megahertz
MIL-STD	Military Standard
MRTFB	Major Range and Test Facility Base
ms	millisecond
NASA	National Aeronautics and Space Administration
NF	noise figure
NPR	noise power ratio
NPRF	noise power ratio floor
NPRI	noise power ratio intermodulation
P	power
PAM	pulse amplitude modulation

PCM	pulse code modulation
PM	phase modulation
p/s	pulse per second
RCC	Range Commanders Council
RCP	right circular polarization
RF	radio frequency
RL	return loss
rms	root-mean-square
SCM	single channel monopulse
SOQPSK-TG	Shaped Offset Quadrature Phase Shift Keying, Telemetry Group
SNR	signal-to-noise ratio
SSG	scan signal generator
SWR	standing wave ratio
TC	time constant
TED	tracking error demodulator
TG	tachometer gradient
TM	telemetry
Vdc	volts direct current
VFO	variable frequency oscillator
VSWR	voltage standing wave ratio
XTAL	crystal
°K	degrees Kelvin

INTRODUCTION

The Telemetry Group of the Range Commanders Council (RCC) has prepared this document to provide common methods for testing radio frequency (RF) equipment. Figure I-1, RF/System Measurements and Data Flow Diagram, is included to serve as a guide for recommended tests to verify equipment status. The use of common methods should minimize problems when organizations exchange test results. Other volumes of this document address test methods for recorder/reproducer systems and magnetic tape, data multiplex equipment, and vehicular telemetry systems. The *Telemetry Standards* (IRIG Standard 106-XX) and the *Telemetry Applications Handbook* (RCC document 119-XX)[1] are companion documents.

The test methods in this document provide standard outlines on how to measure various parameters. The comments listed below apply where appropriate.

1. Equipment may need to be tested at a variety of environmental conditions such as temperature, humidity, vibration, and shock. The user needs to determine the appropriate test conditions.

2. Electromagnetic interference characteristics should be measured in accordance with the latest version of Military Standard (MIL-STD)-462, *Measurement of Electromagnetic Interference Characteristics.*

3. Proper interconnection of equipment is critical for accurate test results. Verify that connectors are not corroded or otherwise damaged. Tighten connectors properly. The cables should not be kinked, cut, stretched, or otherwise damaged. The line losses for RF cables should be known prior to their use for correct interpretation of the data results.

4. The test equipment may output spurious signals that produce erroneous test results. Verify that the test equipment is not causing problems with the measurements.

5. The test equipment should have an accuracy of 10 percent of the specified tolerance (or 10 percent of the absolute value to be measured if no tolerance is given). This accuracy may not always be possible. The test equipment must have accuracy equal to or better than the required accuracy of the measurement.

6. Signal levels may have to be increased to get valid readings on instruments that have limited sensitivity. Microwave counters are one example.

[1] 106-XX refers to the most recent issue of the IRIG Standard 106, *Telemetry Standards* and 119-XX refers to the most recent issue of RCC document 119, *Telemetry Applications Handbook.*

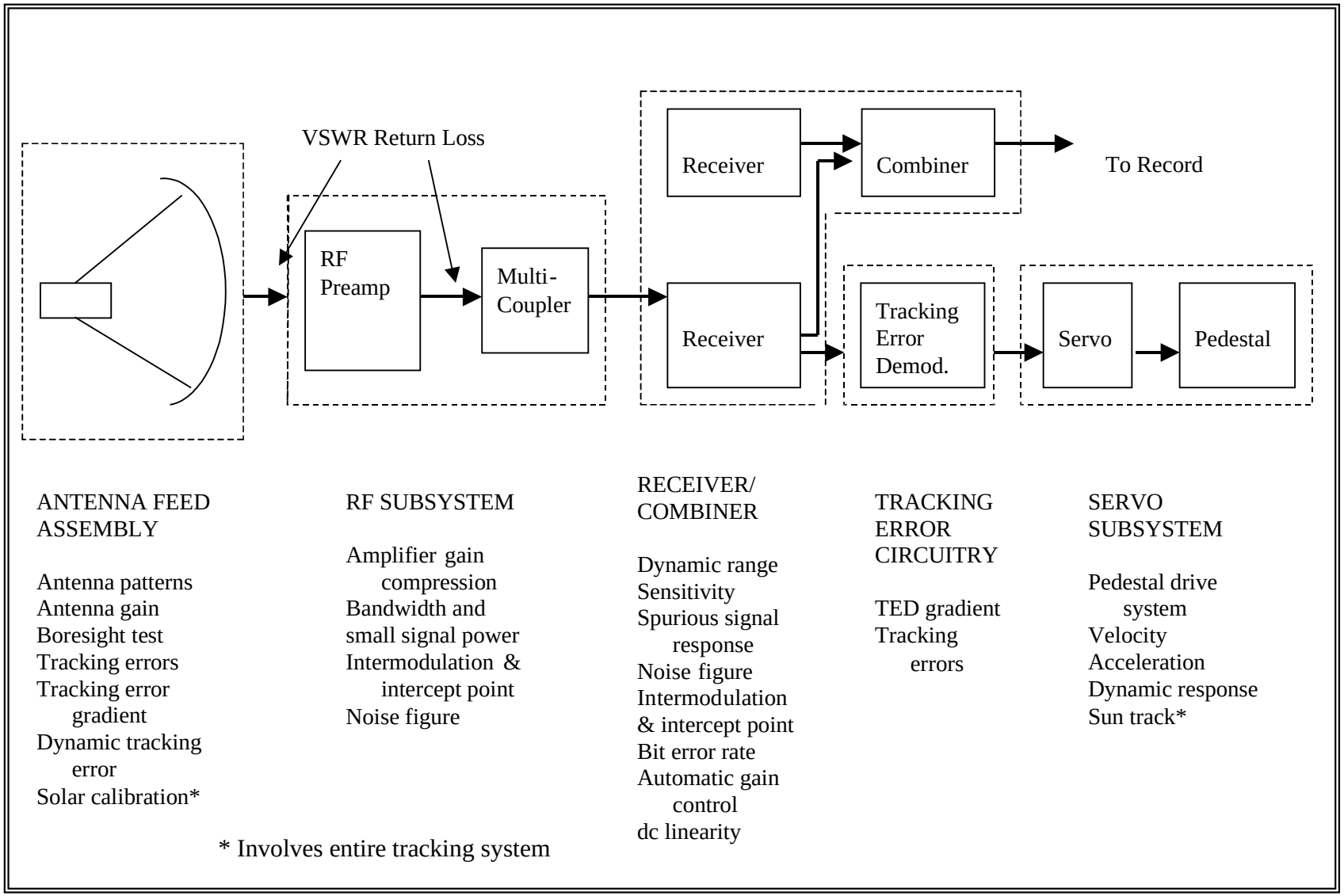

Figure I-1. RF/System Measurements and Data Flow Diagram

CHAPTER 1

TEST PROCEDURES FOR TELEMETRY ANTENNA SYSTEMS

Chapter 1 describes the test procedures used to evaluate the performance of the receiving antenna, the pedestal drive, and the control system. It is assumed that these tests will be performed on an antenna system in the operational configuration. The test procedures are designed to cover a variety of different makes and models of antenna systems.

1.0 Pedestal Drive System Characteristics

These series of tests determine the pedestal servo response characteristics used to evaluate the performance of the pedestal drive system. The tests apply to tracking systems that are not computer controlled. Test method I described in RCC Document 118-89, *Test Methods for Telemetry Systems and Subsystems*, *Volume 2*, has been replaced by the rate loop test, calibration test, and position loop tests. The replacement tests facilitate the pedestal velocity measurement by measuring only one parameter (tachometer output voltage) and by obtaining the velocity from an equation. Also, the tests allow the operator to become more aware of the servo subsystem stages. Test Method II has been modified to allow the operator to measure acceleration and other servo parameters in the event technical specifications have been lost or are questionable.

	Special care must be taken to prevent damage to the electrical and mechanical portions of the pedestal drive system. The procedure for introducing the error drive signal will vary from system to system for this test. The person conducting the test must have sufficient knowledge of the system under test to know these methods and positions and to prevent damage to the system.

TABLE 1-1. TEST MATRIX FOR TELEMETRY ANTENNA SYSTEMS	
Test & Paragraph Number	**Test Description**
1.1	Rate loop test
1.2	Position loop calibration test
1.3	Position loop test
1.4	Velocity and acceleration measurement: strip chart recorder test
1.5	Tracking error voltage gradient test
1.6	Dynamic tracking accuracy test
1.7	Antenna bore sight test
1.8	Antenna gain test
1.9	Antenna pattern test
1.10	Feed assembly unit test
1.11	Solar calibration using linear receiver method test
1.12	Solar calibration using attenuator method test

1.1 TEST: Rate Loop

1.1.1 Purpose. This test measures the response of the tachometer feedback loop to small and large error inputs. The compensation amplifier, power amplifier, drive motor, tachometer, and gearbox are tested. The pedestal velocity is determined and compared to the theoretical value and to the tracking system specifications for possible system deterioration caused by aging or bad components.

1.1.2 Test Equipment. Multi-channel strip chart recorder (5 milliseconds [ms] rise time maximum), digital voltmeter, or ac/dc voltmeter, variable dc voltage source ranging from at least +20 volts dc to –20 volts dc (Vdc) adjustable to 0.1 volts, and variable dc voltage source ranging up to 100 Vdc.

1.1.3 Test Method. The test method is written for systems with an analog antenna position output.

1.1.4 Setup. Connect the voltage source to the pedestal azimuth servo error input and the voltmeter to the tachometer output as shown in Figure 1-1. Open the position loop output to prevent any unwanted error from being introduced into the rate loop.

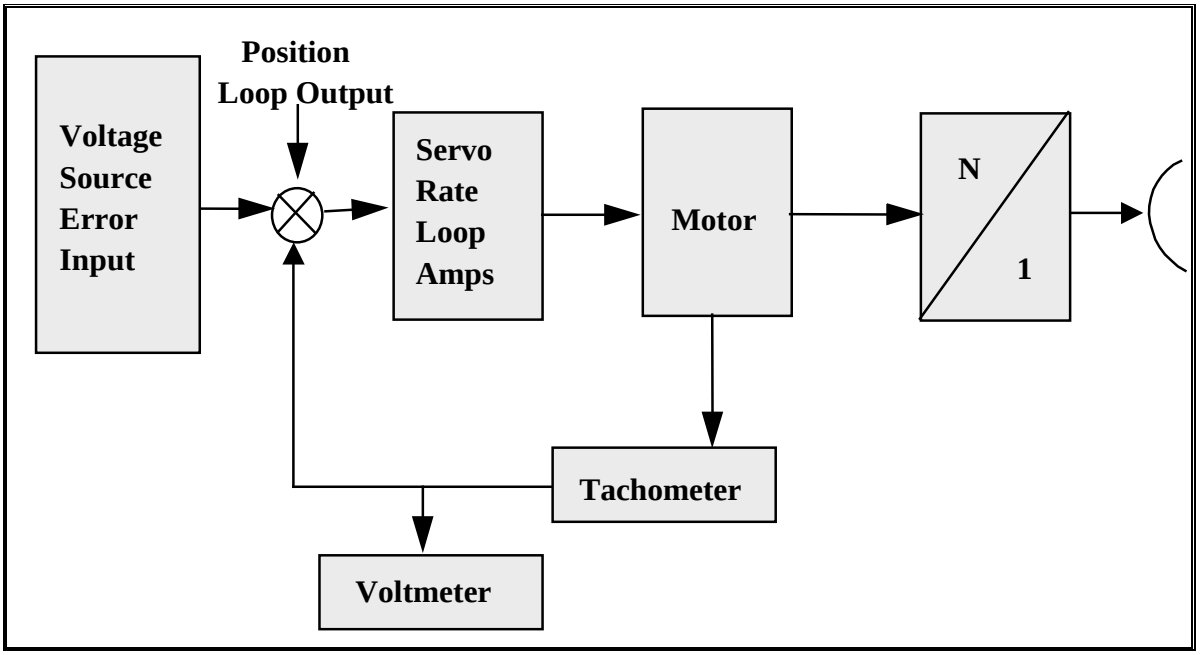

Figure 1-1. Rate loop servo test block diagram (see test 1.1).

1.1.5 Procedure.

1.1.5.1 Position the antenna pedestal at 0° in azimuth and 0° in elevation. Lock the elevation (Stand-By mode) to allow azimuth rotation only.

1.1.5.2 Disable the auto track input by opening the position loop.

NOTE	In most systems, the following command saturates the input to the servo amplifier loop. Any further increase in the input command has no effect on the pedestal velocity.

1.1.5.3 Inject a small positive constant voltage at the input to the rate loop (for example, 0.1 Vdc) to prevent saturating the servo amplifier. Note the direction of pedestal rotation, clockwise (cw), or counterclockwise (ccw). Allow the antenna pedestal to rotate at least 45 degrees. Inject an identical voltage level of opposite polarity to cause the antenna to rotate in the opposite direction.

1.1.5.4 Measure the maximum tachometer output voltage (V_t) with the voltmeter for different input voltages. Repeat subparagraph 1.1.5.3 for input voltages tailored to your specific system. (The example for Data Sheet 1-1 and Data Sheet 1-3 shows specific values for a particular system.) The test error voltages should start with small values and increased until the tachometer output voltage can no longer be increased.

1.1.5.5 Use Equation 1-1 to calculate the pedestal velocity for different input voltages. This equation assumes the tachometer gradient (TG) is known from the tracking system servo characteristics.

$$Velocity = \frac{(TG) \bullet V_t \bullet (6\ \text{deg/sec/rpm})}{Gear\ ratio} \qquad \text{(Eq. 1-1)}$$

Example:

Tachometer gradient = 1000 rpm/20.8 Vdc
Gear ratio = 420:1
1 rpm = 6 deg/sec
Input voltage (Vin) = 0.5 Vdc
Tachometer output voltage (V_t) = 2.495 Vdc (measured value).

$$Velocity = \frac{\frac{1000\ \text{rpm}}{20.8\ \text{Vdc}} \bullet (2.495\ \text{Vdc}) \bullet (6\ \text{deg/sec/rpm})}{420}$$

$$\underline{Velocity = 1.7\ \text{deg/sec}}$$

1.1.5.6 Record the velocity and tachometer output voltage on Data Sheet 1-1 for different voltage inputs. The above tests can be performed for the elevation system if the gear ratio is different or if the elevation system is suspected of having problems. Substitute the “up” direction for “cw” and “down” for “ccw.”

Data Sheet 1-1	**Telemetry Antenna Systems**	
Test 1.1	**Pedestal drive system characteristics: Rate Loop Test**	
Manufacturer:	**Model:**	**Serial No.:**
Test Personnel:		**Date:**

Rate Loop Input Voltage (volts)	**Tachometer Output Voltage** (volts)	**Velocity** (deg/sec)
0.1		
0.2		
0.5		
1.0		
2.0		
3.0		
4.0		
5.0		
Tachometer Gradient (Vdc/rpm)		
Gear Ratio (N/1)		
Rotation (cw/ccw)		

1.2 TEST: Position Loop Calibration

1.2.1 Purpose. The position loop calibration determines the maximum error that the servo acceleration bandwidth amplifiers in the position loop can handle before it saturates. This calibration also tests the synchro demodulator since the induced error is from the synchro circuitry that is used for the manual tracking mode. After performing the position loop calibration, repeat the steps under the rate loop test for the position loop test. This test is recommended if the technical specifications are not available for the position servo bandwidth amplifiers to allow the selection of different acceleration rates.

1.2.2 Test Equipment. Digital voltmeter.

1.2.3 Setup. Disable the pedestal by turning off the pedestal power. Measure the position loop output with the digital voltmeter as shown in Figure 1-2.

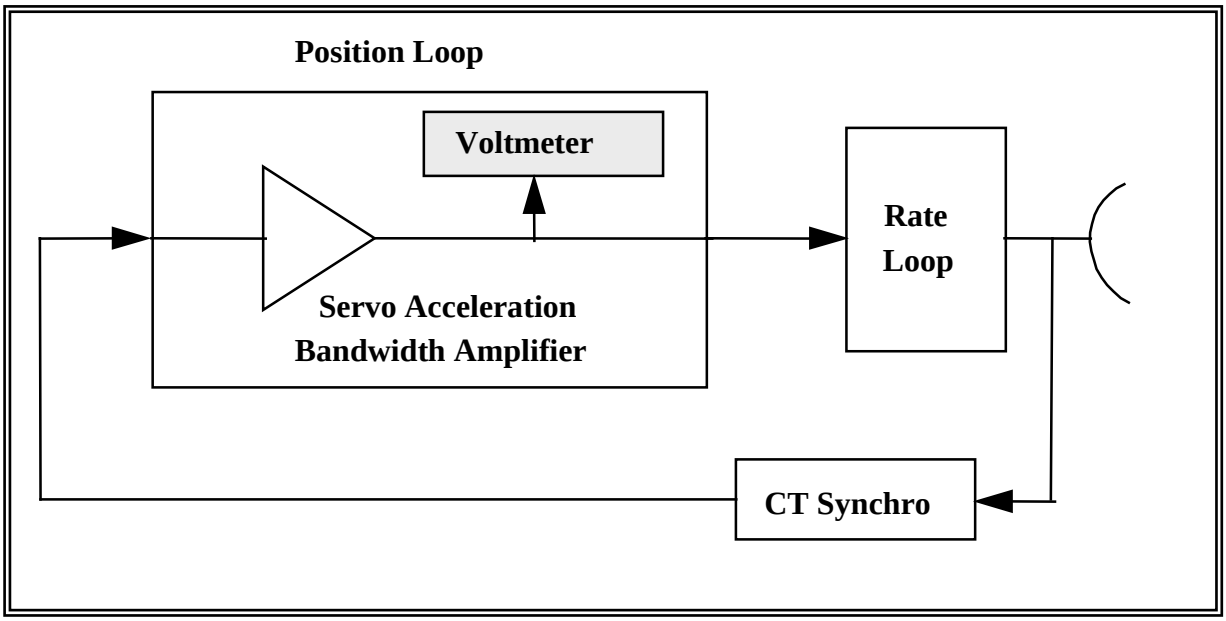

Figure 1-2. Calibration setup for Test 1.2.

1.2.4 Procedure.

1.2.4.1 Select an angle reference start point on the pedestal. Select a low servo acceleration bandwidth amplifier. If the tracking system has different servo acceleration capabilities, the differences are normally due to different servo bandwidth amplifiers or different amplifier feedback loops. Therefore, calibration process should be repeated for each of them. With the pedestal power off, the offset error is induced from the synchro circuitry by rotating the pedestal in small increments of 0.1°. This rotating action allows the position loop to reach a steady-state condition. If the pedestal power is left on, the pedestal would attempt to null out the error.

1.2.4.2 Manually rotate the pedestal with the pedestal hand crank (or by hand to allow for very slow rotation) from your reference position in 0.1° increments. Use the digital antenna angle readouts (azimuth/elevation) to measure pedestal angle offsets for each 0.1° increment.

1.2.4.3 Use the digital voltmeter and measure the output of the servo bandwidth amplifier. Allow the voltage to settle before recording any values.

1.2.4.4 Repeat the process in 0.1° increments until the measured output voltage no longer increases. The point where the gain does not increase is the saturation point.

1.2.4.5 The saturation point should correspond closely to the maximum error the tracking error demodulator (TED) should output for linear operation of the tracking system. Avoid exceeding the saturation point of the TED.

1.2.4.6 The maximum error voltage at the input to the position loop should not exceed the saturation level obtained from the position loop calibration. The maximum error voltage should be less than the saturation level.

1.2.5 Data Reduction. Enter the position loop calibration data in Data Sheet 1-2.

Data Sheet 1-2	Telemetry Antenna Systems
Test 1.2	**Position loop calibration: position loop test servo bandwidth amplifiers**

Antenna Position Angle Offset (degrees)	**Bandwidth Amplifier Output** (volts)

1.3 TEST: Position Loop

1.3.1 Purpose. The position loop is the first stage in the servo loop. This test simulates the output of the TED gradient and determines the same parameters as the rate loop test in subparagraph 1.2. This test measures the position servo parameters for low, medium, and high acceleration if these features are on the tracking system.

1.3.2 Setup. Connect the voltage source to the pedestal azimuth input. Open the TED output to prevent any error from being introduced to the position loop. Connect the voltmeter to the tachometer output as shown in Figure 1-3.

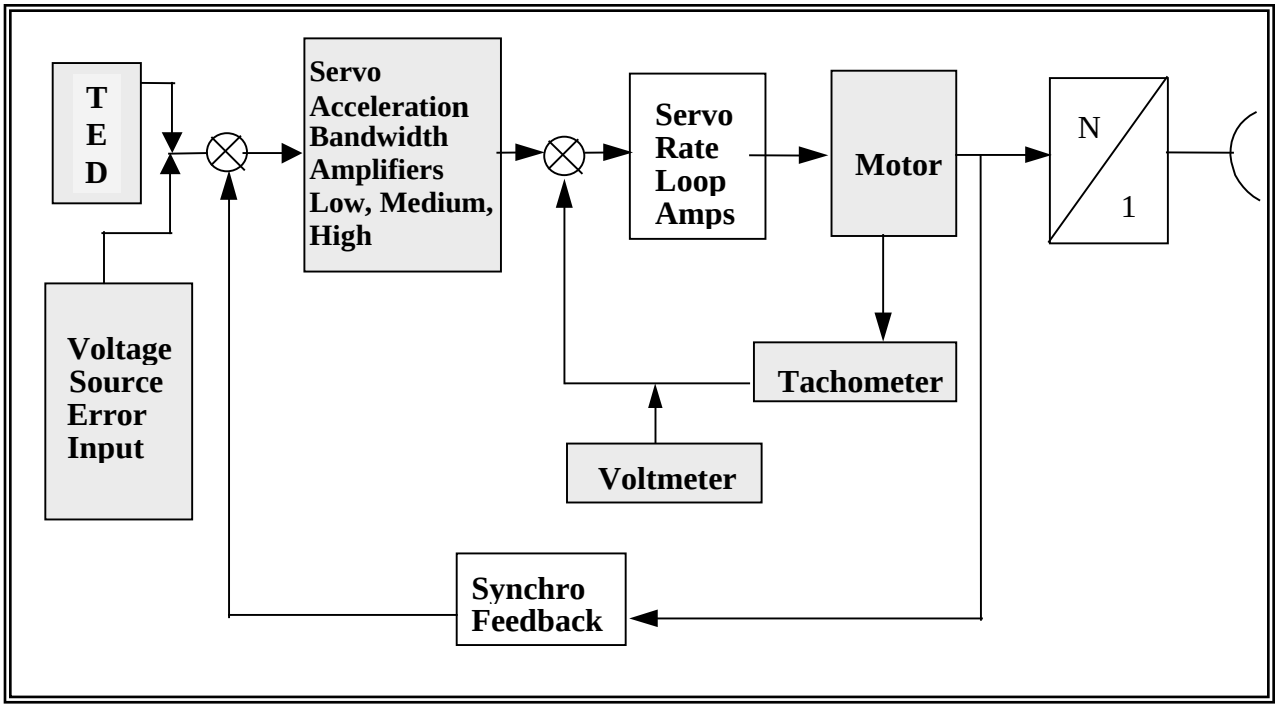

Figure 1-3. Position loop servo test block diagram (see test 1.3).

1.3.3 Procedure.

1.3.3.1 Position the antenna pedestal at 0° in azimuth and 0° in elevation. Lock the elevation (STAND-BY mode) to allow azimuth rotation only.

NOTE	In most systems, a very large error voltage saturates the input to the servo amplifier loop. Any further increase in the input command has no effect on the pedestal velocity.

1.3.3.2 Inject a small positive constant voltage (for example, 0.1 Vdc for a 5-V system) to prevent saturating the servo amplifier, at the input to the position loop. This voltage should not exceed the maximum linear value of the TED. Note the direction of pedestal rotation cw or ccw. Allow the antenna pedestal to rotate at least 45°. Inject an identical voltage level of opposite polarity to cause the antenna to rotate in the opposite direction.

1.3.3.3 Measure the maximum tachometer output voltage (V_t) with the voltmeter for different input voltages. Repeat subparagraph 1.3.3.2 for input voltages tailored to your specific system. The test error voltages should start out small and be increased until the tachometer output voltage no longer increases.

1.3.3.4 Use Equation 1-1, repeated here, to calculate the pedestal velocity for different input voltages. This equation assumes the TG is known from the tracking system servo characteristics.

$$Velocity = \frac{(TG) \bullet V_t \bullet (6\,\text{deg/sec/}rpm)}{Gear\ ratio} \qquad \text{(Eq. 1-1)}$$

Example:

Tachometer gradient *(TG) = 1000 rpm/20.8* Vdc
Gear ratio = *420:1*
1 rpm = 6 deg/sec
Input voltage *(V_{in}) = 0.6 Vdc*
Tachometer output voltage *(V_t) = 87.3* Vdc (measured value).

$$Velocity = \frac{\frac{1000\text{rpm}}{20.8\text{Vdc}} \bullet (87.3\text{Vdc}) \bullet (6\,\text{deg/sec/}rpm)}{420}$$

$$\underline{Velocity = 60\ \text{deg/sec}}$$

1.3.3.5 Record the velocity and tachometer output voltage on Data Sheet 1-3.

1.3.3.6 Position loop input voltages greater than 1 V should not be used unless the TED gradient is linear beyond 1 V.

Data Sheet 1-3	**Telemetry Antenna Systems**	
Test 1.3	**Pedestal drive system characteristics: position loop test**	
Manufacturer:	**Model:**	**Serial No.:**
Test Personnel:		**Date:**

Position Loop Input Voltage (volts)	**Tachometer Output Voltage** (volts)	**Velocity** (deg/sec)
0.1		
0.2		
0.5		
1.0		
2.0		
3.0		
4.0		
5.0		
Tachometer Gradient (Vdc/rpm)		
Gear Ratio (N/1)		
Rotation (cw/ccw)		
Position loop servo bandwidth		
Amplifier (low, medium, high)		

1.4 TEST: Velocity and Acceleration Measurement: Strip Chart Recorder

1.4.1 Purpose. This test measures the pedestal velocity and acceleration using a strip chart recorder.

1.4.2 Setup. Connect the strip chart recorder to the pedestal azimuth outputs as shown in Figure 1-4. Ascertain that the winds are 15 miles per hour (mph) or less to avoid heavy wind torque on the antenna reflector.

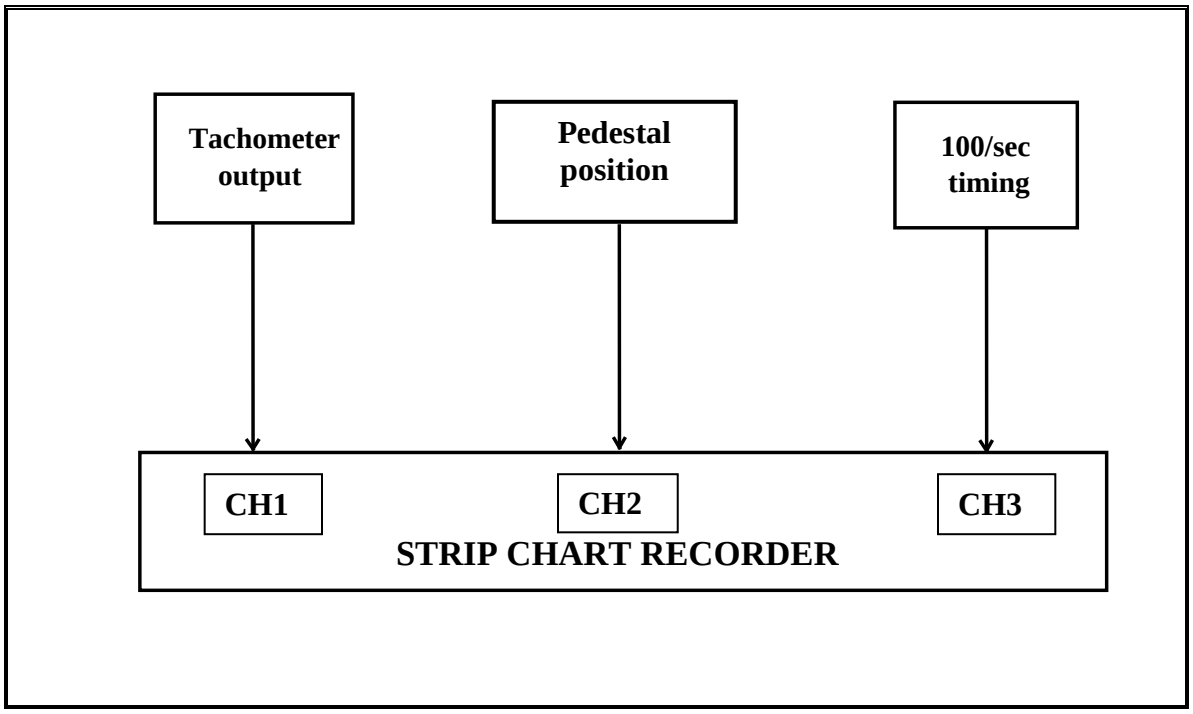

Figure 1-4. Strip chart recorder velocity servo test block diagram (see test 1.4).

1.4.3 Procedure.

1.4.3.1 Calibrate the strip chart recorder by setting the tachometer output channel at the center of the chart for 0 Vdc. Calibrate the recorder every ± 5 V up to the maximum voltage determined by the position loop calibration Test.

1.4.3.2 Rotate the pedestal clockwise at the desired input voltage similar to subparagraph 1.3.3.2 and subparagraph 1.3.3.3.

1.4.3.3 Connect a 100 pulse/second (p/s) timing signal to another channel. Adjust the recorder gain for a deflection of 6.25 millimeters (mm) and 12.5 mm.

1.4.3.4 Set the chart speed to 100 mm per second.

1.4.3.5 Start the strip chart recorder. Apply the input voltage as outlined in subparagraph 1.1.5.3.

1.4.3.6 Allow the pedestal to travel at least 10° after the maximum voltage has been reached.

1.4.3.7 Repeat subparagraphs 1.4.3.2 to 1.4.3.6 for ccw rotation.

1.4.3.8 Repeat the above steps for elevation, substituting up/down for cw/ccw.

	Special care must be taken with elevation tests to prevent damage to the antenna and pedestal since the travel limits are less in elevation.

1.4.4 Data Reduction. The strip chart recording of tachometer voltage, position, and timing is used to determine velocity and acceleration of the pedestal drive system.

1.4.4.1 Velocity. The segment on the strip chart where the tachometer voltage is constant is the maximum constant velocity of the pedestal in that direction (see Figure 1-5). Mark a segment of constant velocity for 10°. Count the corresponding time interval from the timing channel. The velocity (V_θ) is the angle (10°), divided by the time interval (degrees per second) [q/time].

1.4.4.2. Acceleration. The segment on the strip chart where the tachometer voltage changes from maximum velocity in one direction to maximum velocity in the other direction is the area of maximum acceleration (A_θ) (see Figure 1-5). This segment typically approaches a straight line.

1.4.4.3 Tachometer Gradient. Determine the tachometer gradient (TG) first using Equation 1-2. The TG is found by dividing the tachometer output voltage by the angular velocity corresponding to that output voltage.

$$TG = V_t / V_\theta \qquad \text{(Eq. 1-2)}$$

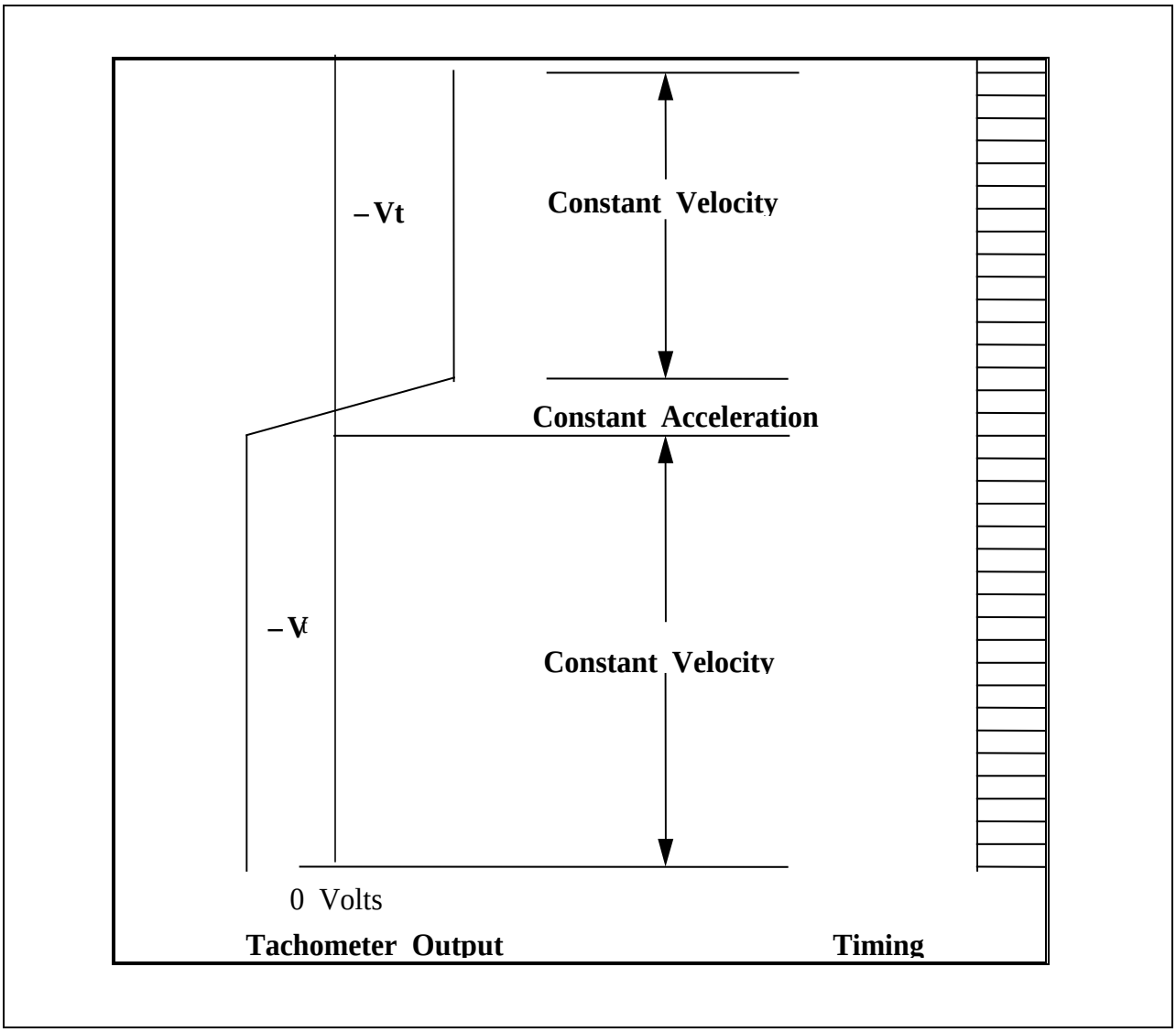

Figure 1-5. Velocity and acceleration (see test 1.4).

Note: The tachometer output voltage and timing marks are for illustration purpose only. They do not correspond to any actual measurements.

1.4.4.4 Mark a segment of the tachometer voltage change that is linear. From the chart, measure the voltage change marked and the time in which it occurred. Thus, acceleration is the change in tachometer voltage divided by the quantity TG multiplied by the time (T_α) as shown in Equation (1-3).

$$A_\theta = \Delta V_t / (TG \bullet T_\alpha) \qquad \text{(Eq. 1-3)}$$

1.4.4.5 Record the velocity and acceleration parameters on Data Sheet 1-4.

Data Sheet 1-4	Velocity and Acceleration Parameters
Test 1.4	Velocity and acceleration measurement: strip chart recorder

	Clockwise (cw)	Counter Clockwise (ccw)	Up	Down
Operational mode				
Tachometer voltage (V_t) volts				
Rotational angle (θ)				
Rotation time (T_v) sec				
Velocity ($V_\theta = \theta / T_v$) deg/sec				
Tachometer gradient (V_t / V_θ)				
Change in tach voltage (ΔV_t)				
Acceleration time (T_α) sec				
Acceleration ($A_\theta = \Delta V_t / TG \bullet T_\alpha$) deg/sec^2				

1.5 TEST: Tracking Error Voltage Gradient

1.5.1 Purpose. This test determines the gradient (error voltage rate of change as a function of degrees offset) of the TED for the azimuth (Az) and elevation (El) axes as a function of incoming signal frequency and polarization. The gradient should be linear for the 3 dB antenna beam width. The linearity ensures the pedestal drive motors for azimuth and elevation will rotate at the correct speed for a given error input. A linear error gradient will allow the antenna to correctly auto track a moving radiating source without losing lock because of antenna lagging or leading the source. This test can also be used to determine the amount of axes crosstalk. In a case where the crosstalk is ten percent or greater, the tracking accuracy may be degraded.

1.5.2 Test Equipment. Voltmeter (dc) or oscilloscope set at 0.1 V/division and test range with variable bore sight source for frequency and polarization.

1.5.3 Test Method. The test method is written for systems with an analog output.

1.5.4 Setup. Ensure that the servo system has been balanced for minimum movement when the system auto track mode is selected. Connect the equipment as shown in Figure 1-6. Ensure the bore sight source antenna is facing the telemetry (TM)-tracking antenna directly

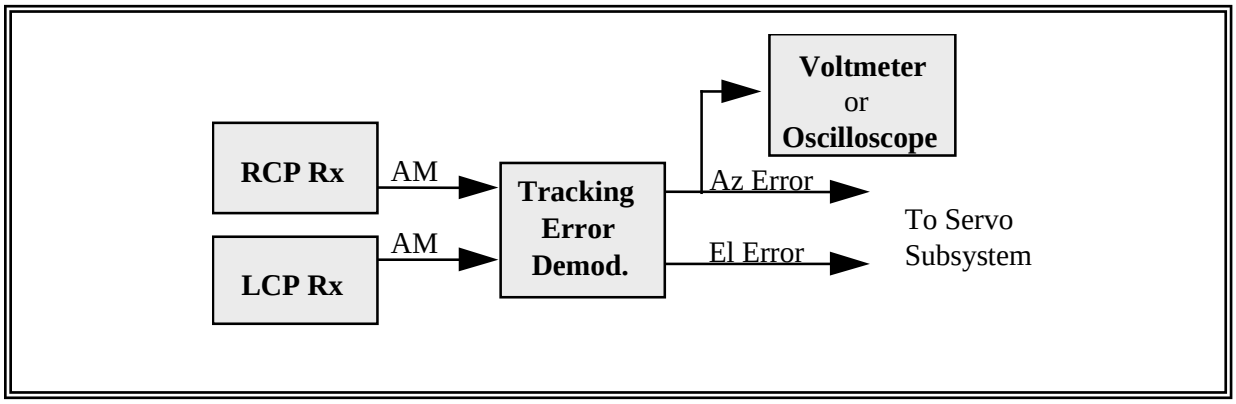

Figure 1-6. Tracking error gradient test block diagram (see test 1.5).

Note: The figure depicts moving the azimuth axis. Measure the elevation (or stationary) axes to obtain the amount of crosstalk.

1.5.5 Conditions. When conducting tests on RF systems, allow sufficient warm-up time to minimize drift in the electronic circuits after the test has started.

1.5.5.1 A test range free of obstructions between the tracking system and the bore sight source is required to eliminate the effects of reflections on the data.

1.5.5.2 The bore sight source should be in the far field and should present an elevation angle of at least twice the antenna 3-dB beam width for the following reasons. First, the effects of ground reflections are reduced, and second, movement of the antenna is permitted downward from the bore sight position.

1.5.5.3 In conducting tests and recording data, it is important for the operator to understand that when the antenna is moved clockwise, the error produced is a counterclockwise error. That is, the error will drive the pedestal counterclockwise back to the bore sight position. Likewise, a counterclockwise movement produces a clockwise error, an upward movement produces a downward error, and a downward movement produces an upward error.

1.5.5.4 Set the bore sight signal output for a received signal strength at least 20 dB above the receiver threshold.

1.5.6 Procedure.

1.5.6.1 Turn the drive system on and rotate the antenna to the bore sight source. Engage the auto track mode and allow the pedestal to null on the bore sight signal. Select "Off" in the elevation axis and "Manual" in the azimuth axis.

1.5.6.2 Ensure that the error signals for both azimuth and elevation are 0 V. No further zeroing of the elevation error signal is required. Use the dc voltmeter (or oscilloscope) to measure the TED output for azimuth and elevation.

1.5.6.3 Record the azimuth and elevation angles. These angles will be the reference values for offsetting the antenna. Move the antenna clockwise in small increments; for example, a 3-dB beam width of 4° is 0.1° up to one-half of the 3-dB beam width. Record the angle and the error voltage on the counterclockwise portion of Data Sheet 1-2 for each reading. Also, measure and record the stationary axes voltage at each point. This voltage can be used to determine crosstalk.

1.5.6.4 Repeat subparagraph 1.5.6.3 for counterclockwise, up, and down movements.

1.5.6.5 Repeat subparagraphs 1.5.6.1 through 1.5.6.4 for each frequency and polarization of interest.

1.5.7 Data Reduction.

1.5.7.1 The most useful form of the error gradient data is a graph. Using linear graph paper, plot the antenna offset angle along the abscissa and the corresponding error voltages along the ordinate (see Figure 1-7). The example at Figure 1-7 is for a system where the 3-dB beam width error gradient is 1 Vdc/deg.

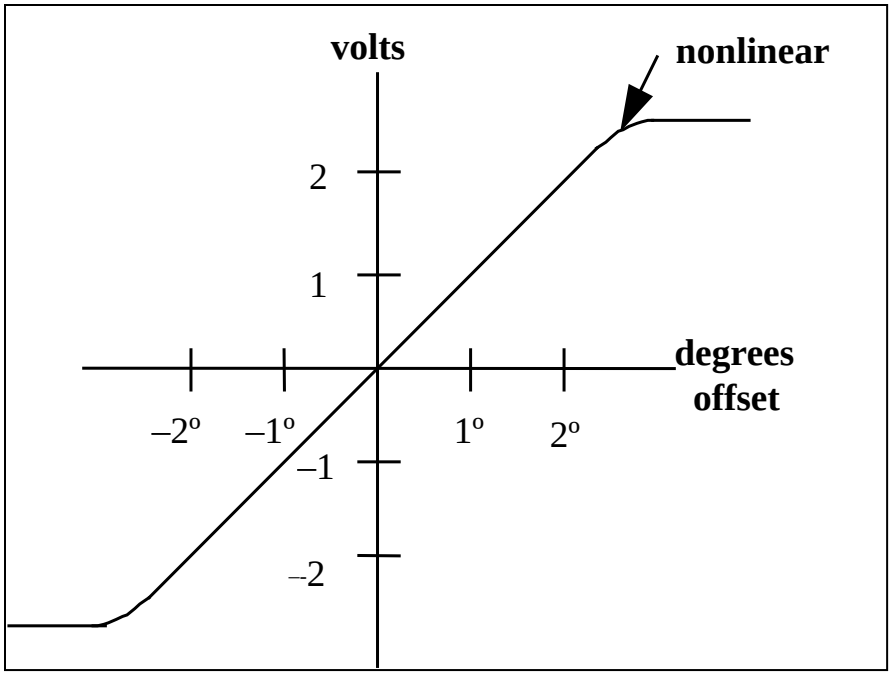

Figure 1-7. Tracking error gradient linearity slope for 1 Vdc/degree (see test 1.5).

1.5.7.2 When this data is combined with the results of test 1.1.5.6, an evaluation of antenna tracking error versus pedestal velocity can be performed. This procedure is described in paragraph 1.6.

1.5.7.3 The axes crosstalk can be determined by dividing the stationary axis voltage by that of the non-stationary axis voltage for a given offset angle. Multiply the results by 100 to get the amount of crosstalk in percentage.

1.5.7.4 Record the tracking error voltage gradient data on Data Sheet 1-5.

Data Sheet 1-5	Telemetry Antenna Systems	
Test 1.5	**Tracking error voltage gradient**	
Manufacturer:	**Model:**	**Serial No.:**
Test Personnel:		**Date:**

Error voltage versus off-bore sight angle

Frequency:

Polarization:

Error Voltage (V)				
Off Bore sight Angle (deg) (0.1° increments)	**Clockwise** (cw)	**Counter Clockwise** (ccw)	**Up**	**Down**
Percent crosstalk				
(Stationary voltage/nonstationary voltage) •100				

1.6 TEST: Dynamic Tracking Accuracy

1.6.1 Purpose. This test determines the antenna offset angle produced when tracking in the automatic tracking mode. This offset angle is the tracking error for the given pedestal angular velocity when in the automatic tracking mode. By knowing the maximum tracking error, the measured tracking error can be compared with the calculated value obtained from the system servo error coefficients (or servo constants) such as K_p, K_v, and K_a. These values define the dynamic tracking rate limits as shown in Equation 1-4.

$$\theta_\varepsilon = \frac{\text{position}}{K_p} + \frac{\text{velocity}}{K_v} + \frac{\text{acceleration}}{K_a} \qquad \text{(Eq. 1-4)}$$

Where:

K_p = Position error coefficient (units in seconds)

K_v = Velocity error coefficient (units in seconds^{-1})

K_a = Acceleration error coefficient (units in seconds^{-2})

θ_ε = Maximum error that the servo can follow in the auto track mode (units in degrees).

1.6.2 Test Equipment. Variable dc voltage source ranging from ±20 Vdc and adjustable to 0.1 V and dc voltmeter.

1.6.3 Setup. Connect the test equipment as described in subparagraph 1.3.2.

1.6.4 Conditions. Locate the TED input to the servo amplifier loop and make provisions for introducing an external signal from the variable voltage source.

	Special care must be taken to prevent damage to the mechanical and electrical portions of the antenna drive system.

1.6.5 Procedure.

1.6.5.1 Place the antenna drive system for elevation in the “Off” mode. Turn the tracking receiver off.

1.6.5.2 Place the drive for azimuth in the automatic mode with the antenna at 0° for azimuth and elevation. The pedestal should not move; if it does, balance the servo amplifier.

1.6.5.3 Starting at 0 Vdc, introduce a positive signal to the input determined in subparagraph 1.1.5.3 which will cause the antenna to move. Movement stops when the signal is removed. Increase the voltage until the maximum pedestal velocity is just reached. Record this voltage.

NOTE	The maximum pedestal velocity is reached when the input drive no longer causes an increase in the tachometer output voltage.

1.6.5.4 Divide the recorded voltage into 5 or 10 steps depending upon the accuracy desired. With the test setup as described in test 1.4, turn the recorder on. Introduce the voltages determined above, one at a time, and allow the pedestal to reach a constant velocity for at least 10 Degrees.

NOTE	It will probably be necessary to move the antenna back to 0° each time a voltage is introduced.

1.6.5.5 Change the voltage polarity and repeat subparagraphs 1.6.5.1 to 1.6.5.4.

1.6.5.6 Repeat subparagraphs 1.6.5.1 through 1.6.5.5 for the elevation axis. For the down movement, start at 90° rather than 0° elevation.

1.6.6 Data Reduction.

1.6.6.1 Using the procedure in subparagraph 1.4.4.1 of test 1.4, determine the velocity for each corresponding voltage introduced. Record this data on Data Sheet 1-6.

1.6.6.2 Plot this data on linear graph paper placing the voltage along the ordinate and the corresponding velocities along the abscissa. A separate graph should be made for azimuth and elevation.

1.6.6.3 Combine this data with the results obtained in subparagraph 1.5.7.1 of test 1.5 to determine the actual tracking error angle for various pedestal velocities.

1.6.6.4 From the graph obtained in subparagraph 1.6.6.2, determine the velocity in question. Find the corresponding drive voltage. On the graph obtained in subparagraph 1.5.7.1, locate this voltage on the error voltage ordinate. Locate the corresponding offset angle.

1.6.6.5 This offset angle is the tracking error for the given pedestal angular velocity when in the automatic tracking mode.

1.6.6.6 The velocity for a given offset angle can be determined in a similar manner.

Data Sheet 1-6	Telemetry Antenna Systems			
Test 1.6	**Dynamic tracking accuracy**			
Manufacturer:	**Model:**	**Serial No.:**		
Test Personnel:		**Date:**		
Driving Error Voltage		**Velocity**		
Maximum	**Clockwise** (cw)	**Counter Clockwise** (ccw)	**Up**	**Down**

1.7 TEST: Antenna Bore sight

1.7.1 Purpose. This test determines any variation in the bore sight axis of the antenna and feed assembly unit (FAU) because of changes in frequency, polarization, or time.

1.7.2 Test Equipment. Bore sight source and test range free of obstructions and bore sight source with changeable frequency and polarization.

1.7.3 Setup. Ensure that the demodulator circuits and the servo circuits are properly balanced (minimum drift).

1.7.4 Procedure.

1.7.4.1 Position the antenna to face the bore sight source. Place the drive system in the automatic tracking mode.

1.7.4.2 Record the azimuth and elevation angles on Data Sheet 1-7. Select the standby mode.

1.7.4.3 Change the bore sight frequency to various frequencies throughout the band of interest. Select the automatic mode and allow the servo to lock on for each frequency selected. Record the corresponding angles.

1.7.4.4 Change between receiver's right circular polarization (RCP) and left circular polarization (LCP) while observing at least three frequencies across the band of interest. More frequencies may be necessary to better characterize the antenna. Observe any change in bore sight angles and record the results on Data Sheet 1-7.

1.7.4.5 Allow the drive system to lock on to the bore sight source in the auto track mode. Leave the system in automatic tracking mode for at least 5 minutes while recording peak changes in bore sight angles.

NOTE 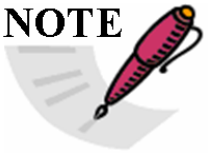	The procedure designed in subparagraph 1.7.4.5 may not be required for all frequencies and polarizations.

1.7.5 Data Reduction. Variations in the bore sight axis greater than 0.1° could be indicative of a skewed feed assembly unit with respect to the reflector.

Data Sheet 1-7	Telemetry Antenna Systems
Test 1.7	**Antenna bore sight test**

Manufacturer:	Model:	Serial No.:
Test Personnel:		Date:

Frequency	Polarization	Az Angle	(Peak) Az	El Angle	(Peak) El

1.8 TEST: Antenna Gain

1.8.1 Purpose. This test verifies the relationship between the antenna reflector and the FAU. The antenna gain is a function of the reflector diameter and frequency of operation. This test is not designed to measure the absolute parameters of the receiving antenna. To measure exact parameters, the antenna must be removed from the tracking system and mounted on a controlled test range. A method for computing the theoretical gain is introduced for a comparison to the measured gain.

1.8.2 Theoretical Antenna Gain. The theoretical antenna gain can be calculated for an antenna having an aperture of 52 percent using Equation 1-5.

$$Gain = \frac{4\pi Ae}{\lambda^2} \qquad \text{(Eq. 1-5)}$$

Where:

Ae = *Antenna effective area (m^2)*
λ = *Wavelength in meters*
η_ε = *Ae / Ap = aperture efficiency*
Ap = *Antenna physical area (m^2)*

Example:

Aperture efficiency (η_ε) = 52%
Physical area = Ap = $\pi \bullet (D/2)^2$
Reflector diameter (D) = 8 ft

$$Ap = \frac{\pi \bullet (8 \bullet .3048)^2}{2^2} = 4.7\ m^2$$

$$Ae = \eta_\varepsilon Ap = .52 \bullet 4.7 = 2.444\ m^2$$

At 2.3 GHz: λ = 0.13m :

$$Gain = \frac{4\pi Ae}{\lambda^2} = \frac{4 \bullet \pi \bullet 2.444}{(0.13)^2} = 1817.29$$

$$Gain = 10 \bullet \log_{10}(1817.29)$$

$$Gain = 32.59\ dB$$

1.8.3 Test Equipment. Bore sight source with an unobstructed test range, signal generator to calibrate the XY plotter and the strip chart recorder for the frequencies of interest, standard gain antenna calibrated in the frequency band of interest, tracking receiver, XY plotter, and strip chart recorder.

1.8.4 Test Method. Two test methods are recommended for plotting the data. Method 1 uses an XY plotter. Method 2 uses a strip chart recorder. For either method, measure the system noise floor to establish the reference level (amplitude) in dB.

1.8.4.1 Test Method 1: XY Plotter

1.8.4.1.1 Conditions. Allow the receiver to warm up for a minimum of 30 minutes. Ascertain that no multipath conditions exist.

1.8.4.1.2 Setup. Connect the equipment as shown in Figure 1-8.

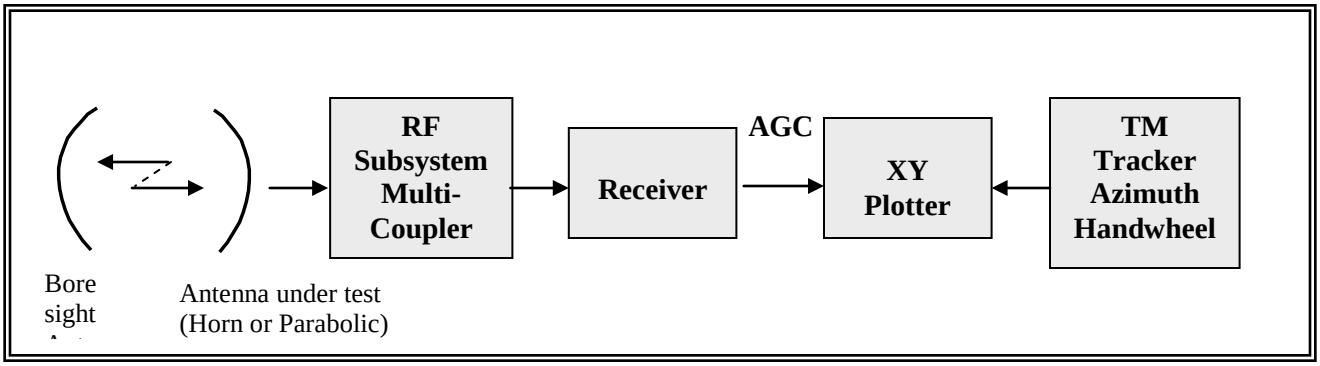

Figure 1-8. Antenna gain measurement using XY plotter (see test 1.8).

1.8.4.1.2.1 This test assumes that the bore sight antenna is transmitting linear vertical polarization at first and horizontal polarization when the procedure calls for rotating the antenna. Also, the reference horn antenna is assumed to be a linear antenna. If the bore sight antenna transmits circular (left or right), there is no need to rotate the horn antenna. Instead, add the 3-dB difference because of the different polarizations. The same information applies if the reference antenna is circularly polarized and the bore sight antenna is linearly polarized.

1.8.4.1.2.2 Calibrate the XY plotter by tuning the bore sight signal generator and test receiver to the bore sight frequency. Most of the time, this bore sight frequency of interest is a common mission frequency or the center of the frequency band. Connect the receiver automatic gain control (AGC) output to the Y-input of the XY plotter. Use the measured noise floor as your reference. Calibrate the XY plotter in 10-dB steps from the measured noise floor to +50 dB using the bore sight signal generator and the test antenna pointing directly to the bore sight antenna. The calibration should be in the center of the XY plotter paper. The remaining calibration should be in 1-dB steps from the known horn antenna gain value to slightly more than the calculated gain in subparagraph 1.8.2.

1.8.4.1.2.3 If the bore sight antenna is linearly polarized, set up the standard gain horn antenna to the same polarization (vertical with vertical and horizontal with horizontal).

1.8.4.1.3 Procedure.

1.8.4.1.3.1 Point the test antenna (and horn antenna) directly at the bore sight antenna. If the bore sight source is a signal generator, increase the signal RF level output until the tracking receiver indicates at least +20 dB above the receiver noise floor.

1.8.4.1.3.2 Ascertain peak signal level by checking for maximum signal in azimuth and elevation.

1.8.4.1.3.3 Mark the horn antenna maximum gain value on the calibrated XY plotter paper on the right side.

1.8.4.1.3.4 Remove the horn antenna and repeat the measurement using the test antenna. Mark the gain of the test antenna (vertical gain) on the right side higher than the horn antenna marking.

1.8.4.1.3.5 Rotate the horn antenna 90° to obtain the other linear polarization (horizontal) to repeat the above measurements.

1.8.4.1.3.6 Rotate the bore sight antenna 90° similar to the horn antenna for compatible polarizations and repeat subparagraphs 1.8.4.1.3.4 and 1.8.4.1.3.6 (mark on left side of paper).

1.8.4.2 Method 2: Strip Chart Recorder

1.8.4.2.1 Conditions. Same as subparagraph 1.8.4.1.1

1.8.4.2.2 Setup. Connect the receiver AGC output to the strip chart recorder for vertical deflection (see Figure 1-9). Calibrate the strip chart recorder using the signal generator and receiver AGC output in 10-dB steps from the noise floor up to + 50 dB. Calibrate the recorder in 1-dB steps for values up to ±15 dB from the calculated gain value.

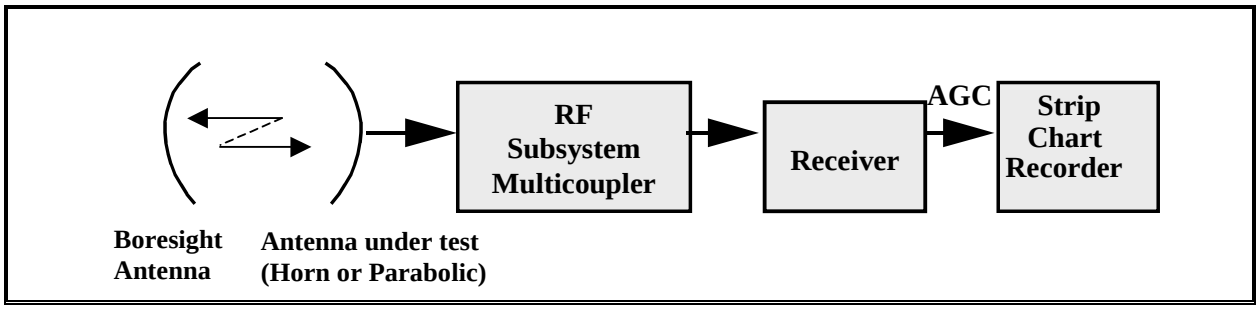

Figure 1-9. Antenna gain measurement using a strip chart recorder (test 1.8, method 2).

1.8.4.2.3 Procedure. Point the test antenna (and horn antenna) directly at the bore sight antenna. Tune the receiver to the bore sight frequency.

1.8.4.2.3.1 Ascertain peak signal level.

1.8.4.2.3.2 Mark the horn antenna maximum gain value on the strip chart recorder.

1.8.4.2.3.3 Remove the horn antenna and repeat subparagraphs 1.8.4.2.3 through 1.8.4.2.3.2 for the test antenna.

1.8.4.2.3.4 Repeat subparagraphs 1.8.4.1.3.4 and 1.8.4.1.3.6 under method 1.

1.8.4.2.3.5 Repeat the same subparagraphs in 1.8.4.2.3 for the horizontal polarization measurements.

1.8.5 Data Reduction. Add the two values (vertical and horizontal) as shown in the example below. Record the data on Data Sheet 1-8.

Typical gain for a horn antenna @ S-band: +15 dB (reference)

Measured vertical polarization gain above reference: 10 dB

Measured horizontal polarization gain above reference: 11 dB

Vgain = Reference + measured vertical = 25 dBi

Hgain = Reference + measured horizontal = 26 decibels referenced to isotropic radiator (dBi)

$10 \cdot \log_{10} Nv = 25$ dB, Nv = 316.227

$10 \cdot \log_{10} Nh = 26$ dB, Nh = 398.107

Where:

Nv = vertical gain expressed as a power ratio
Nh = horizontal gain expressed as a power ratio.

316.227 + 398.107 = 714.334

$10 \cdot \log_{10} (714.334) = 28.539$ dB

Antenna Gain = 28.5 dBi

Data Sheet 1-8	Telemetry Antenna Systems	
Test 1.8	**Antenna gain test**	
Manufacturer:	**Model:**	**Serial No.:**
Test Personnel:		**Date:**

Frequency MHz _____

Standard antenna gain (G_S) dBi _____

Bore sight antenna polarization

	Gain	
	(dBi)	**Power ratio**
Tracking antenna vertical polarization gain (G_V)		
Tracking antenna horizontal polarization gain(G_H)		
Antenna gain $N_A = N_H + N_V$ (power ratio)		
Antenna gain (dBi) $= 10 \cdot \log_{10}(N_A)$		

The cables from the tracking system antenna to the preamplifier and those from the standard gain antenna to the preamplifier should be the same type and length. If this is not possible, it will be necessary to calibrate the cables and compensate the readings to obtain the true gain.

1.9 TEST: Antenna Pattern Test

1.9.1 Purpose. The antenna pattern test checks the relationship between the antenna reflector and the FAU. An antenna pattern measurement verifies that the FAU is at the focal point, side-lobe symmetry, and correct level below the main lobe. It is not designed to measure the absolute parameters of the receiving antenna. To measure exact parameters, the antenna must be removed from the tracking system and mounted on a controlled test range.

1.9.2 Test Equipment. Bore sight source with an unobstructed view and an XY plotter with good resolution. An antenna recorder could be used in place of the XY plotter.

1.9.3 Setup. Connect the test equipment as shown in Figure 1-10.

1.9.3.1 Set the bore sight signal level so that the received signal at the tracking receiver is at least 40 dB above the noise level.

1.9.3.2 Adjust the recorder gain so that the bore sight on-axis signal gives maximum recorder displacement.

1.9.4 Conditions. This test should be performed with little or no wind. Multipath can lead to false conclusions. Ascertain that no multipath conditions exist by conducting the test away from any potential reflective surface and at an elevation high enough to prevent ground reflections.

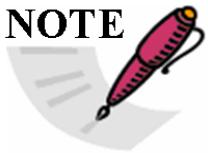	The calibrations used for paragraph 1.8 should be used including doing a noise floor measurement and calibration for 0 to + 50 dB in 10 dB steps to properly measure the side lobes.

1.9.5 Procedure.

1.9.5.1 Rotate the antenna pedestal to point to the bore sight source. Record the azimuth and elevation auto track angles. Set elevation to OFF. Rotate the azimuth axis –X degrees counter-clockwise from the recorded auto track angles. The limits –X to +X, for rotating the antenna is normally from –180° to +180°. This limit allows an examination of the back lobes as well as the main and side lobes. If the intent of the measurement is to verify the first side-lobe levels and the main lobe for symmetry, then the measurement limits should be decreased to emphasize this desired area. Start the recorder at 5 mm/s (0.2 in/s).

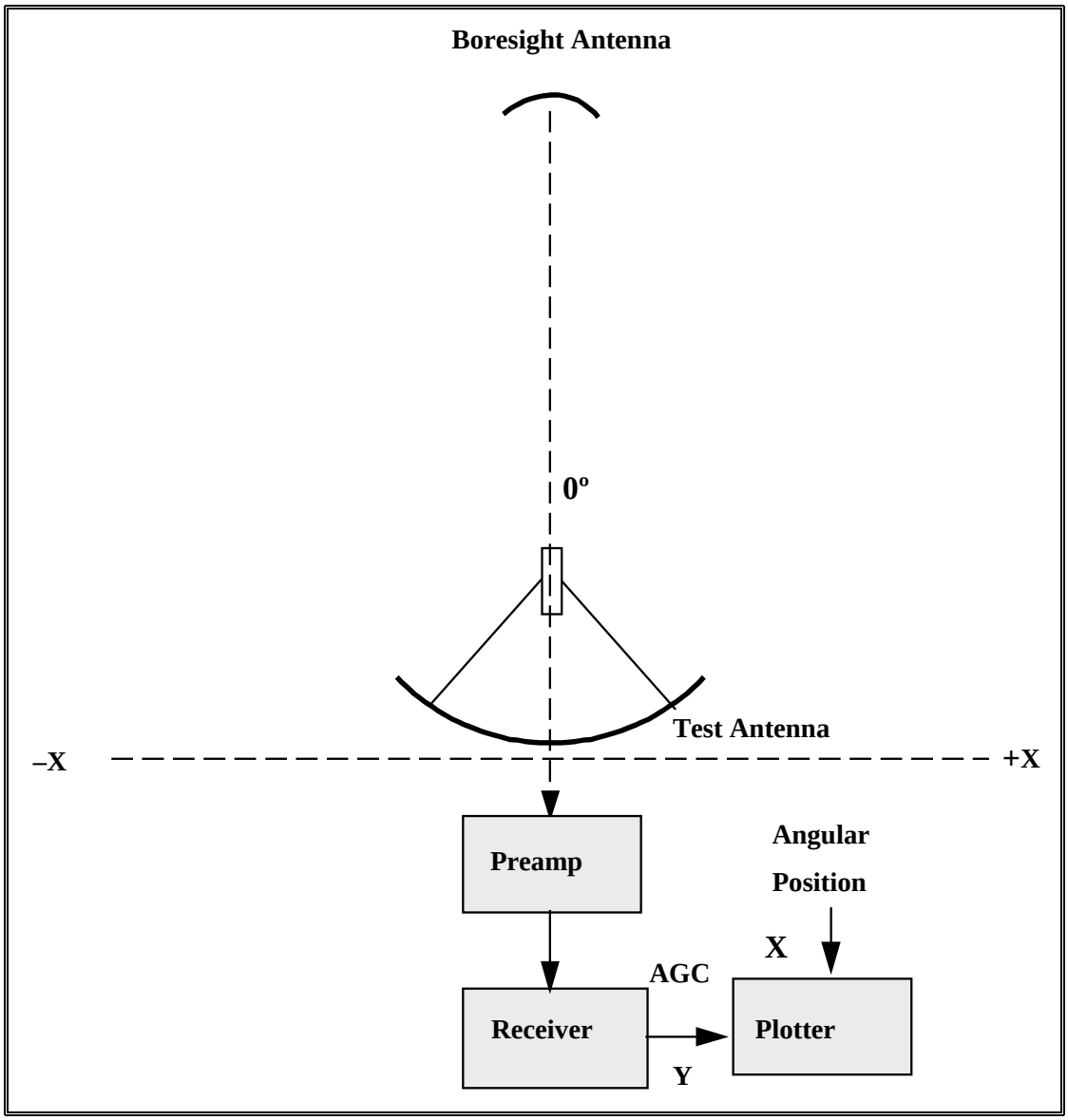

Figure 1-10. Antenna pattern measurement setup (see test 1.9).

1.9.5.2 The pedestal must be rotated at a constant rate clockwise through the auto track peak angles from –X to +X degrees. If the antenna drive system has a rate mode, set it for a movement of 5° per second. If it has only a synchro control mode, the operator must try to keep the rotation rate as near to 5° per second as possible. Although other techniques may be devised, they will not be discussed here.

1.9.5.3 After the pedestal has completed its expected rotation clockwise, stop the recorder and pedestal.

1.9.5.4 Repeat subparagraphs 1.9.3.3.1 through 1.9.3.3.3 for as many frequencies as desired. Intervals of 25 MHz are usually sufficient.

1.9.6 Data Reduction.

1.9.6.1 The antenna response recorded on the strip chart recorder will indicate the side-lobe levels and any major back lobes present. Unsymmetrical side-lobe levels could be caused by a skewed feed. The absence of the first side lobes or lower side-lobe levels could be caused by a feed assembly not at the focal point.

1.9.6.2 To produce a response record for the elevation axes in both directions (down as well as up), the feed assembly must be rotated 90°, and the test conducted as an azimuth movement.

1.10 TEST: Feed Assembly Unit

1.10.1 Purpose. This test determines the proper error signal deflections in azimuth and elevation generated by the tracking feed assembly unit. The errors generated by this unit form the basis for the automatic tracking of a telemetry tracking system. One test is for a single channel monopulse (SCM) tracking technique and the other one is for a conical scan tracking technique.

1.10.2 Single Channel Monopulse (SCM). The SCM tracking technique uses the difference channel signals to amplitude modulate the carrier. The difference channel signals represent the azimuth and elevation error offset from bore sight center in the form of square pulses. The amplitude modulation of the difference signals is caused by fast switching diodes synchronized by signals from a scan signal generator (SSG). The amplitude modulation (AM) output of the tracking receiver separates the error signals from the receiver intermediate frequency (IF) and becomes the input to the TED. Demodulation by the TED separates the azimuth and elevation error signals synchronized by the same scan signals from the SSG. The error pulses are four square wave pulses as shown in Figures 1-11 and 1-12. Figure 1-11 indicates minimum error in azimuth and elevation while Figure 1-12 indicates an azimuth error and an elevation error.

1.10.2.1 Test Equipment. Analog or digital oscilloscope. Bore sight transmitting source and radiating antenna.

1.10.2.2 Setup. Ensure direct line of sight between the telemetry tracking antenna and the bore sight antenna. Align the demodulator circuits and servo circuits for minimum movement.

1.10.2.3 Procedure. Turn the telemetry tracking system on and allow a minimum of 15-minute warm-up time.

1.10.2.3.1 Balance the servo system for minimum drift.

1.10.2.3.2 Tune the receiver to the bore sight source frequency.

1.10.2.3.3 Point the test feed (antenna) directly to the bore sight source ensuring that no influence from multipath exists.

1.10.2.3.4 Ensure the bore sight source signal radiates a strong signal of at least +20 dB above the noise floor.

1.10.2.3.5 Monitor the receiver LCP and RCP amplitude modulation (AM) output or the error input to the TED with the oscilloscope.

1.10.2.3.6 Use the antenna control handwheel to rotate the antenna to null the error pulses. The azimuth and elevation indicators should display the angles from the test antenna to the bore sight source. When the four pulses form a horizontal straight line (or close to), the error is minimum and the signal level is maximum (see Figure 1-11). Note that the timing sequences may not be representative of all types of SCM feeds.

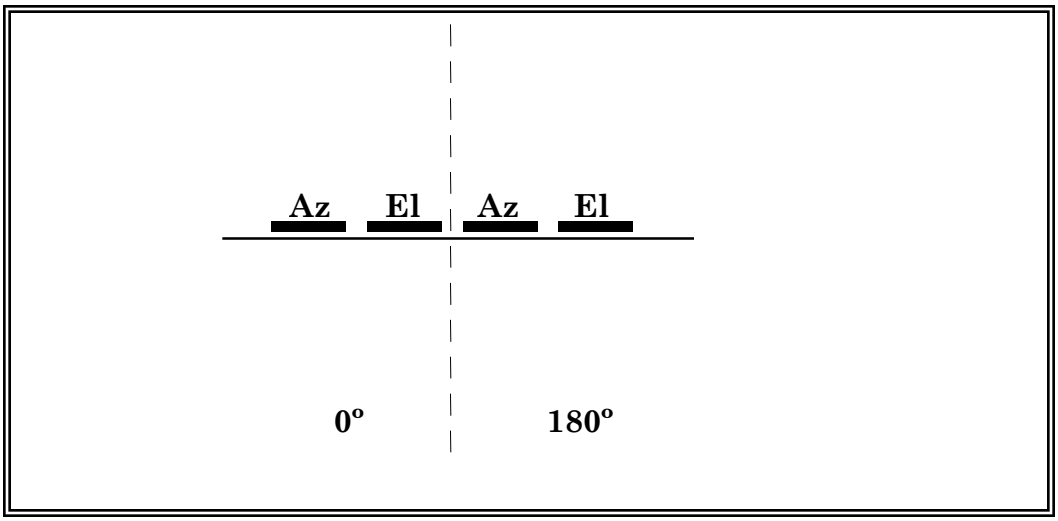

Figure 1-11. SCM error pulses indicating minimum error (see test 1.10).

Note: The timing sequences may not be representative of all types of SCM feeds.

1.10.2.3.7 Rotate the azimuth handwheel cw and the elevation handwheel up no more than 1/2 the 3-dB beam width. The azimuth and elevation error pulses will increase in one direction (for the 0° phase and "mirror image" for the 180° phase). By rotating the antenna in a ccw (and down) direction the azimuth and elevation errors will change directions (see Figure 1-12).

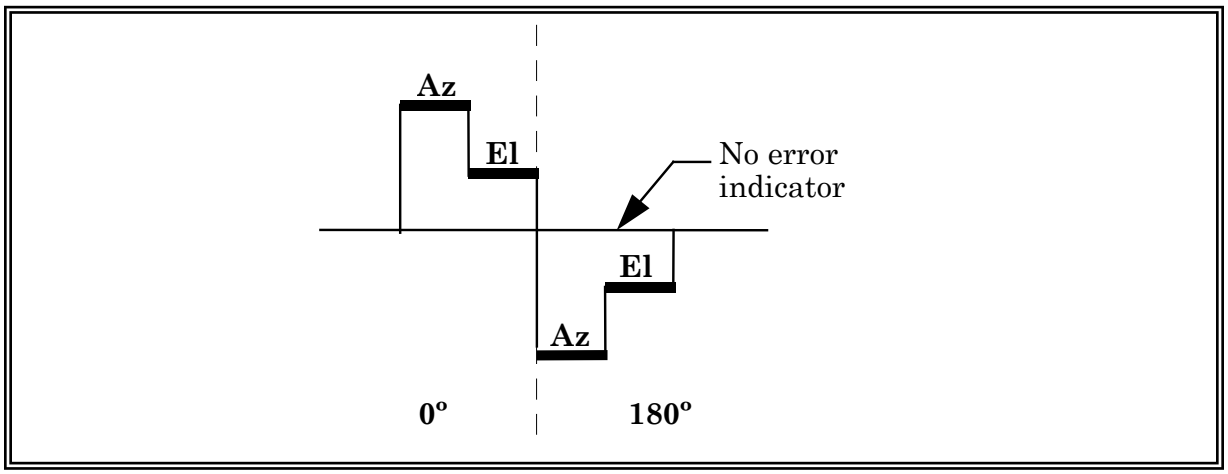

Figure 1-12. SCM error signals indicating azimuth and elevation errors for one type of SCM feed (see test 1.10).

1.10.2.4 Data Reduction. The error pulses should indicate a definite separation between azimuth and elevation Az/El errors at the 0° phase and again at the 180° phase. There should also be a definite separation between the Az/El error pairs at 0° and Az/El error pairs at 180°. (see Figure 1-12 for an illustration of correct pulse movement).

1.10.3 Conical Scan Technique. Most conical scan techniques (CST) use a 30-Hz (or variable from 5 to 35 Hz) scan motor to rotate an eccentric circular waveguide (horn). A vertical and horizontal dipole antenna is normally housed behind the waveguide. The rotation of the horn

generates a sine wave that is amplitude modulated by the amount of offset the antennas are from the bore sight center. The amplitude and phase represent the error from the bore sight center that the servo response must correct to maintain auto track. The scan motor is directly connected to an optical commutator. One-half of the rotating cam is clear while the other half is anodized. Two photoelectric lights constantly illuminate the cam generating two square waves that are in-phase quadrature at the scan motor frequency. The proper in-phase relationship between the square pulse and the error sine wave indicates correct alignment of the feed assembly unit. The correct phasing of the reference signal pair is optimized to reduce crosstalk between orthogonal tracking channels (see Figure 1-13).

1.10.3.1 Test Equipment. Dual trace digital oscilloscope and radiating bore sight antenna.

1.10.3.2 Setup. Ensure direct line-of-sight between the telemetry tracking system and the bore sight antenna with no multipath interference.

1.10.3.3 Procedure. The radiating source should output a strong signal so the receiving system reads at least +20 dB above the measured noise floor.

1.10.3.3.1 Point the test antenna at the bore sight antenna and monitor the AM input to the TED and the square wave reference at the TED. Minimum error will be indicated by a very small sine wave.

1.10.3.3.2 Rotate the pedestal in azimuth only and observe the AM increase. Where the sine wave crosses the zero reference line, observe the square pulse (see Figure 1-13). The positive going portion of the square pulse should align with the sine wave here. If it is not aligned, determine the amount of channel crosstalk present and the possible reason for the erratic automatic track. The amount of acceptable crosstalk should be known to determine if the feed assembly unit needs adjustment.

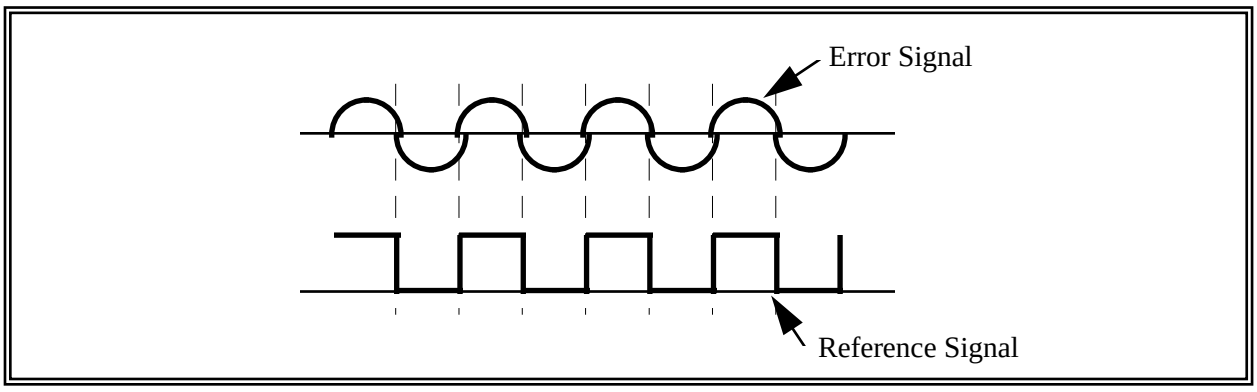

Figure 1-13. CST error and reference signals alignment (see test 1.10.3).

1.11 TEST: Solar Calibration using Linear Receiver Method

1.11.1 Purpose. This test determines the figure of merit [gain/temperature (G/T)] of the receiving antenna system. The G/T is the ratio of the antenna gain to the system noise temperature. G is the receiving antenna gain minus the losses between the receiving antenna and a reference point. T is the receiving system temperature comprised of the sum of the antenna noise temperature (T_a) and the receiver noise temperature (T_r). Therefore, the G/T is a good measure of the sensitivity of the receiving system. The G/T is frequently used in link analysis calculations.

1.11.2 Test Equipment. Telemetry receiver with linear IF output and manual gain control or AGC hold feature and power meter with square-law detector or true root-mean-square (rms) voltmeter.

1.11.3 Setup. Connect the test equipment as shown in Figure 1-14.

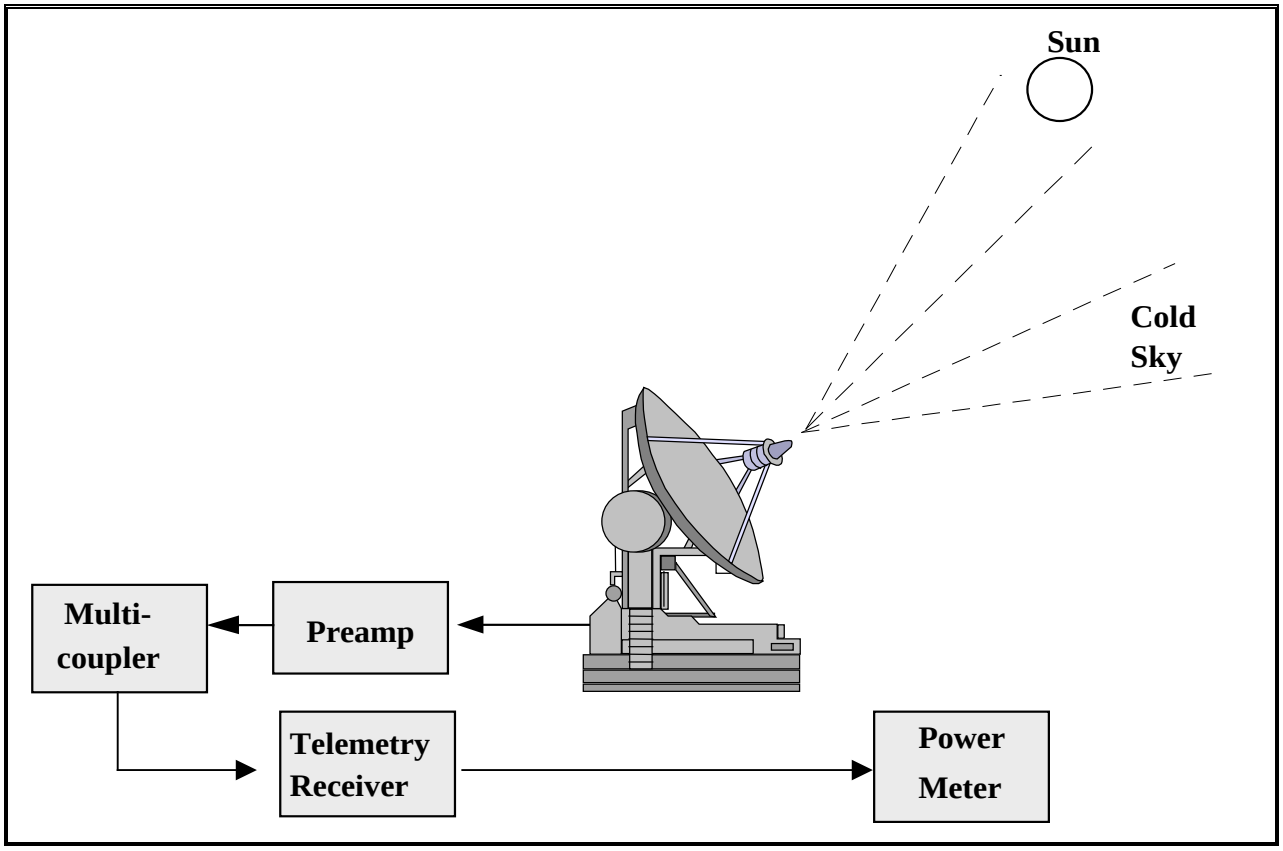

Figure 1-14. Antenna solar calibration using linear receiver (see test 1.11).

1.11.4 Conditions. System must be at operational stability (adequate warm-up period and minimum noise in the servo system) before test is conducted. To make power measurements, the tracker should point at the sun at an elevation angle of at least 10°. An elevation angle of 10° will contribute approximately 10ºK to the antenna temperature at frequencies from 1.4 to 2.3 GHz. At higher elevation angles up to 90º, the antenna temperature decreases to 1.8ºK[1]. The above figures are based on clear sky, 7.5 g/m^3 water-vapor concentration. Equation (1-6) can be used to calculate the effects on the system temperature at different elevation angles. To determine receiving system linearity, see Appendix C. Set the receiver center frequency to the desired test frequency. Be aware that interfering signals may invalidate test results.

	Care should be taken to prevent solar heat damage to equipment at the focus of parabolic reflectors.

1.11.5 Procedure.

1.11.5.1 Point the antenna at the sun. Fix manual gain (engage AGC hold) in the linear portion of the receiver. Record the power meter reading as P_2 (V_2).

1.11.5.2 Point the antenna at the cold sky (at least several beam widths away from the sun). The antenna should be rotated in azimuth or elevation to prevent interference from the sun. Record the power meter reading as P_1 (V_1).

1.11.5.3 Repeat procedure for other desired frequencies.

1.11.6 Data Reduction.

1.11.6.1 Record power meter readings (in dBm) on Data Sheet 1-9.

1.11.6.2 Calculate the figure of merit using Equation 1-6 if a power meter was used, or Equation 1-7 if a true rms voltmeter was used. See Appendix C for additional details about figure of merit calculations.

1.11.6.3 To convert the power flux density measurements into flux densities at the test frequencies, use Equation 1-8.

1.11.6.4 The units of the measured power flux densities are 10^{-22} W/m^2/Hz; that is, a reported value of 111 would mean $111 \cdot 10^{-22}$ W/m^2/Hz.

$$k_2 = A_g / \sin \alpha \qquad \text{(Eq. 1-6)}$$

$$\frac{G}{T} = 10 \bullet \log_{10}\left[\frac{8 \pi k k_2 L}{S\lambda^2}\left[\frac{P_2}{P_1} - 1\right]\right] \qquad \text{(Eq. 1-7)}$$

Where:

- λ = wavelength (*me*= aperture ters)
- G/T = figure of merit in dB/°K
- l = test frequency wavelength (meters)
- L = correction factor (see Appendix C)
- k = Boltzmann's constant (1.380622 • 10–23 watts Hz–1ºK–1)
- k_2 = atmospheric attenuation (see Appendix C)
- S = solar power flux density (random polarization) in watts m–2/Hz at the test time and at the test frequency
- P_1 = cold sky power meter reading as a power ratio
- P_2 = power meter reading looking at the sun as a power ratio

$$\frac{G}{T} = 10 \bullet \log_{10}\left[\frac{8\pi k k_2 L}{S\lambda^2}\left[\frac{V_2^{\,2}}{V_1^{\,2}} - 1\right]\right] \qquad \text{(Eq. 1-8)}$$

Where:

- V_1 = true voltmeter reading antenna pointing at the cold sky
- V_2 = true voltmeter reading antenna pointing at the sun

NOTE 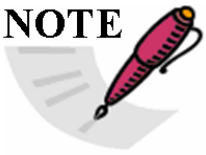	Solar power flux density measurements are made daily at the Sagamore Hill Radio Observatory at 1415 and 2695 MHz. It is advisable to specify the lower and upper frequency when requesting solar flux readings. Contact information: Phone: DSN 272-8087 or commercial (402) 232-8087 Internet: http://www.swpc.noaa.gov/ftpdir/lists/radio/rad.txt

$$S = \left[\frac{S_{1415}}{S_{2695}}\right]^{\Gamma} \bullet S_{2695} \qquad \text{(Eq. 1-9)}$$

Where:

$$\Gamma = \frac{\log \frac{f_t}{2695}}{\log \frac{1415}{2695}} \qquad \text{(Eq. 1-10)}$$

Where:

S	=	corrected power flux density at the test frequency
S_{2695}	=	measured power flux density at 2695 MHz
S_{1415}	=	measured power flux density at 1415 MHz
f_t	=	test frequency (MHz)

NOTE 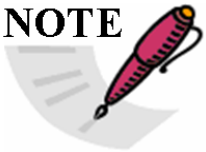	Equations 1-9 and 1-10 assume that the test frequency is between 1415 and 2695 MHz.

Data Sheet 1-9	**Telemetry Antenna Systems**	
Test 1.9	**Solar calibration using linear receiver method**	
Manufacturer:	**Model:**	**Serial No.:**
Test Personnel:		**Date:**

Time: _____ **Location:** _____

Solar flux at 1415 MHz: _____ Solar flux at 2695 MHz: _____

Meter type: power meter: _____ True RMS voltmeter: _____

Antenna beam width: _____ Aperture correction factor (L): _____

Receiver No.: _____ Receiver IF bandwidth: _____

Frequency	**Corrected solar flux**	**Polarization**	**P_2 (V_2) (sun)**	**P_1 (V_1) (cold sky)**	**Figure of merit**

1.12 TEST: Solar Calibration using Attenuator Method

1.12.1 Purpose. This test determines the figure of merit (*G/T)* of the receiving antenna system. The *G/T* is the ratio of the antenna gain to the system noise temperature. *G* is the receiving antenna gain minus the losses between the receiving antenna and a reference point. *T* is the receiving system temperature comprised of the sum of the antenna noise temperature (T_a) and the receiver noise temperature (T_r). Therefore, the *G/T* is a good measure of the sensitivity of the receiving system. The *G/T* is frequently used in link analysis calculations.

1.12.2 Test Equipment. Telemetry receiver with linear IF output and manual gain control or AGC-hold feature, power meter with square-law detector or true rms voltmeter, and precision attenuator.

1.12.3 Setup. Connect the test equipment as shown in Figure 1-15.

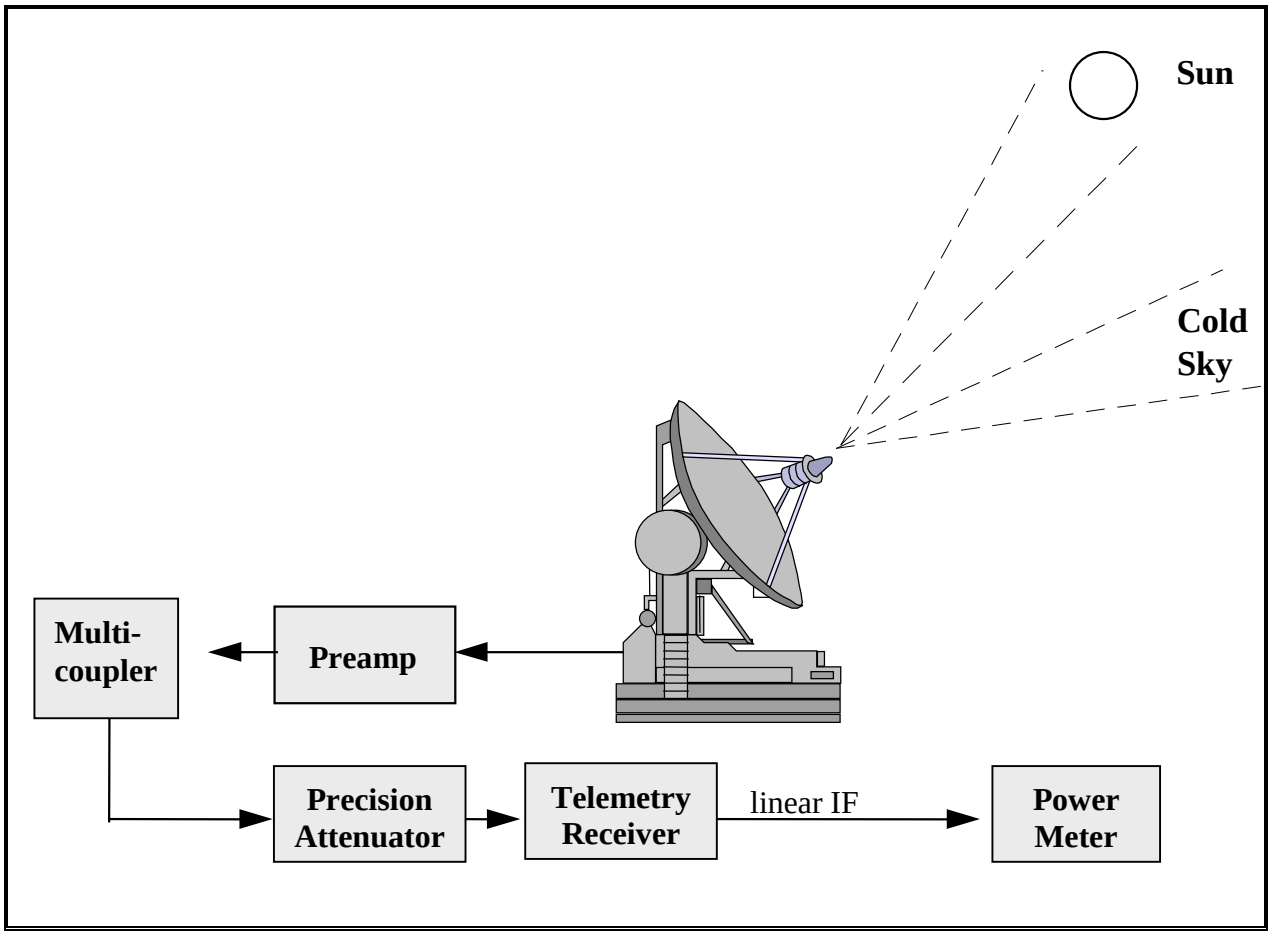

Figure 1-15. Antenna solar calibration using attenuator (see test 1.12).

1.12.4 Conditions. System must be at operational stability before test is conducted. To make power measurements, the tracker should point at the sun at an elevation angle of at least 10° in elevation. An elevation angle of 10° will contribute approximately 10ºK to the antenna temperature at frequencies from 1.4 to 2.3 GHz. At higher elevation angles up to 90°, the

antenna temperature decreases to 1.8°K[1]. The above figures are based on clear sky, 7.5 g/m^3 water-vapor concentration. To determine receiving system linearity, see Appendix C. Set the receiver center frequency to the desired test frequency. Be aware that interfering signals may invalidate test results.

1.12.5 Procedure.

1.12.5.1 Point the antenna at the cold sky (at least several antenna beam widths away from the Sun). Set attenuator to zero. Set manual gain in the linear portion of the receiver range. Record power meter (true rms voltmeter) reading on Data Sheet 1-9 as P_x (V_x).

	Care should be taken to prevent solar heat damage to equipment at the focus of parabolic reflectors.

1.12.5.2 Point antenna at the sun. Increase attenuation so the power meter (true rms voltmeter) again reads P_x (V_x). Record the attenuator reading on Data Sheet 1-10.

1.12.5.3 Repeat procedure for other frequencies as desired.

1.12.6 Data Reduction. Convert the amount of attenuation necessary to obtain a meter reading equal to P_x (V_x) to a power ratio and use in Equation (1-8) for calculating G/T in place of P_2/P_1, that is,

$$\frac{G}{T} = 10\log_{10}\left[\frac{8\pi k k_2 L\left(10^z - 1\right)}{S\lambda^2}\right] \qquad \text{(Eq. 1-11)}$$

Where:

Y = attenuator reading (in dB)
z = Y/10
l = test frequency wavelength (meters)
L = aperture correction factor (see Appendix C)
k = Boltzmann's constant (1.380622 •10 $^{-23}$ watts Hz^{-1} $^oK^{-1}$)
k_2 = atmospheric attenuation (see Appendix C)
S = solar power flux density (random polarization) in watts m^{-2} Hz^{-1}

Data Sheet 1-10	**Telemetry Antenna Systems**
Test 1.10	**Solar calibration using attenuator method**

Manufacturer:	**Model:**	**Serial No.:**
Test Personnel:		**Date:**

Time: _____	**Location: _____**

Solar flux at 1415 MHz:		Solar flux at 2695 MHz:	
Meter type: power meter:		True RMS voltmeter:	
Antenna Beam Width		Aperture correction factor (L):	
Receiver No.:		Receiver IF bandwidth	

Frequency	**Corrected solar flux**	**Polarization**	**P_2 (V_2) (sun)**	**P_1 (V_1) (cold sky)**	**Figure of merit**

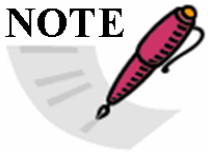	Solar power flux density measurements are made daily at the Sagamore Hill Radio Observatory at 1415 and 2695 MHz. It is advisable to specify the lower and upper frequency when requesting solar flux readings. Contact information: Telephone: DSN 272-8087 or commercial (402) 232-8087 Internet: http://www.swpc.noaa.gov/ftpdir/lists/radio/rad.txt

1.12.5.5 To convert the power flux density measurements into flux densities at the test frequencies, use Equation (1-8) and Equation (1-9).

CHAPTER 2

TEST PROCEDURES FOR TELEMETRY RF PREAMPLIFIERS

2.0 General

This chapter describes the test procedures used in measuring the performance parameters of telemetry RF preamplifiers. Included are methods for determining the range of linear operation by measuring intermodulation (IM) products, gain compression level, power (small signal) gain, bandwidth, intercept point (IP), voltage standing wave ratio (VSWR), noise figure (NF), and gain variation because of temperature and supply voltage.

TABLE 2-1.
TEST MATRIX FOR TELEMETRY RF PREAMPLIFIERS

Test & Paragraph Number	Test Description
2.1	Amplifier gain compression
2.2	Bandwidth and small signal power gain
2.3	Intermodulation (IM) products and intercept point (IP)
2.4	Voltage standing wave ratio (VSWR) by return loss
2.5	Noise figure using automatic noise figure meter
2.6	Impedance mismatch

2.1 TEST: Amplifier Gain Compression

2.1.1 Purpose. This test measures the 1-dB compression point which is defined as the point where the gain of an amplifier has been decreased 1 dB from the small signal gain. Gain compression results from nonlinear operations of amplifiers and is a major cause of intermodulation noise that can increase the bit error rate in digital systems and cause distortion in analog systems.

NOTE	Perform this test at various frequencies if necessary as 1dB compression is not constant across the entire band, especially with wide band amplifiers.

2.1.2 Method: Power Meter as the Measuring Device

2.1.2.1 Test Equipment. Signal generator and power meter (2), 3-dB directional coupler.

2.1.2.2 Setup. Connect the test equipment as shown in Figure 2-1.

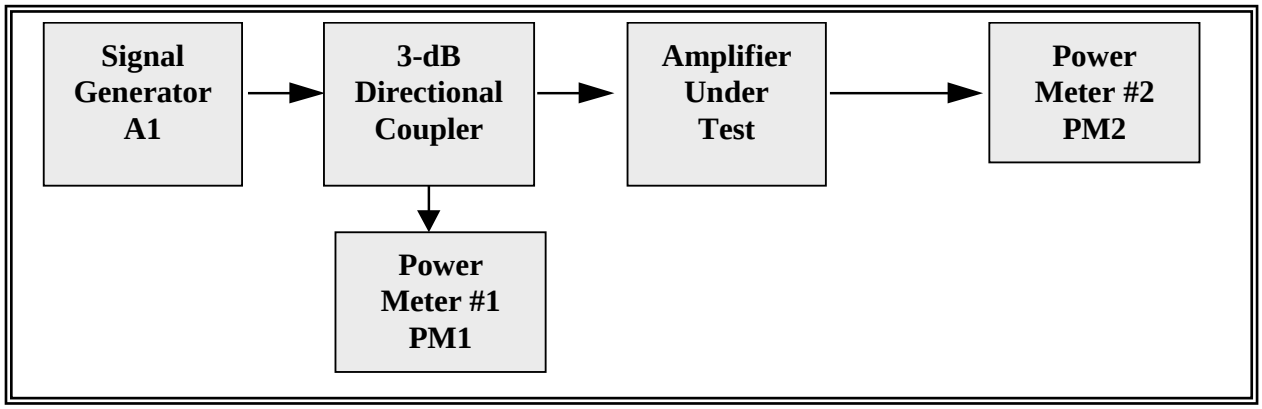

Figure 2-1. Test setup for measurement of amplifier gain compression (see test 2.1.3).

2.1.2.3 Conditions. Perform this test under laboratory conditions after a warm-up time of at least 30 minutes. All procedures are conducted with continuous wave signals (unmodulated) into the device under test.

	Do not exceed the amplifier manufacturers maximum recommended input power, because permanent damage to the amplifier may result.

2.1.2.4 Procedure. Connect the amplifier between the signal generator and the power meter as illustrated in Figure 2-1. Apply a low level signal to the amplifier input and record the power output level from both power meters as *P*1 for power meter number one and *P*2 for power meter number two on Data Sheet 2-1. Allow the power meters to settle before annotating the power meter readings. Increase the low level signal by decreasing the attenuator setting, $A_{1,}$ on the signal generator. Record the power meter readings on Data Sheet 2-1. Continue this incremental increase until the gain is 1 dB less than the gain in the first step. This condition is known as the 1-dB compression point. Any further increase in the input signal level would drive the amplifier into the nonlinear region of the amplifier and possibly generate intermodulation products.

2.1.2.5 Data Reduction

2.1.2.5.1 Calculate and record the gain of the amplifier after each 1-dB increase in input power using equation 2-1.

$$G = P2 - P1 \qquad \text{(Eq. 2-1)}$$

Where:

G = amplifier gain (dB)
P_1 = power input (dBm)
P_2 = power output (dBm)

2.1.2.5.2 Plot amplifier output power versus input power and note where the output level decreases 1 dB from the linear extrapolation of amplifier response as illustrated in Figure 2-2. This is the amplifier gain compression level. Record the input/output gain compression level on Data Sheet 2-1.

Data Sheet 2-1	**Test Procedures for Telemetry RF Preamplifiers**	
Test 2.1	Amplifier gain compression Method: Power meter measurement	
Manufacturer:	**Model:**	**Serial No.:**
Test Personnel:		**Date:**

RF Input Power *P*1 (dBm)	**RF Output Power *P*2 (dBm)**	**Gain: *G* = *P*2 – *P*1 (dB)**

Test Frequency: _____

1 dB compression point: P_0 _____ (dBm) P_i _____ dBm

Take additional readings where data slope changes abruptly.

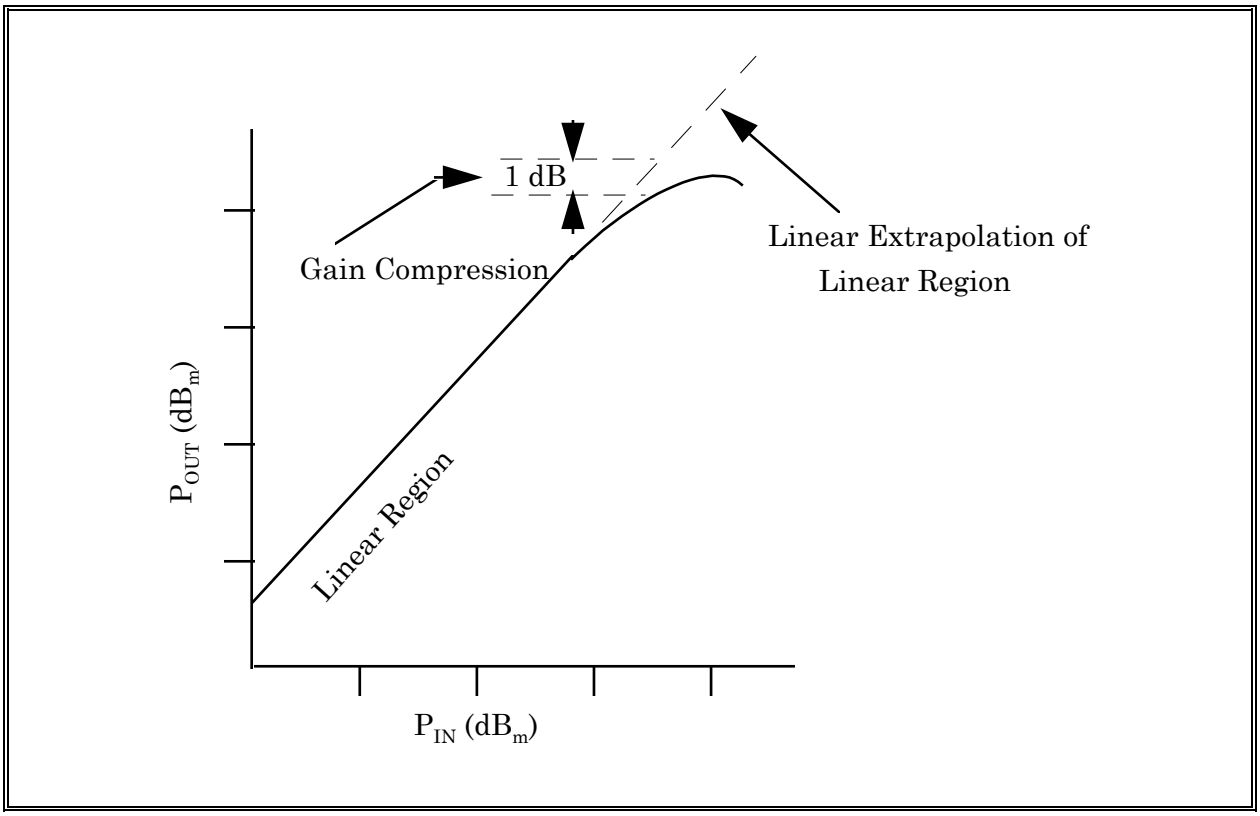

Figure 2-2. Amplifier gain compression (see test 2.1).

2.2 TEST: Bandwidth and Small Signal Power Gain

2.2.1 Purpose. This test measures bandwidth, which is defined as the range of frequencies over which the amplitude response does not decrease more than 3 dB relative to the response at the reference point (such as the center frequency) over the specified frequency band of the device under test. The amplifier small signal power gain is the ratio of output power to input power in the linear operating range and is generally expressed in dB (assuming the impedance of the input/output circuits are properly matched). It is not uncommon to eliminate the specification for 3dB bandwidth, especially when a band pass filter is utilized prior to the low noise amplifier The band pass filter will establish the 3dB band width. Operational frequencies are commonly used to identify band edges and optimized for best flatness across the band. Sometimes it is required to specify out of band gain. Out of band gain shall not exceed in band gain.

2.2.2 Test Equipment. Signal generator, spectrum analyzer, sweep oscillator, and attenuator. (Attenuators are needed if the signal generator is not a newer model that includes precision attenuators).

2.2.3 Test Method.

2.2.3.1 Setup. Connect the test equipment as shown in Figure 2-3. (Either method illustrated is acceptable.)

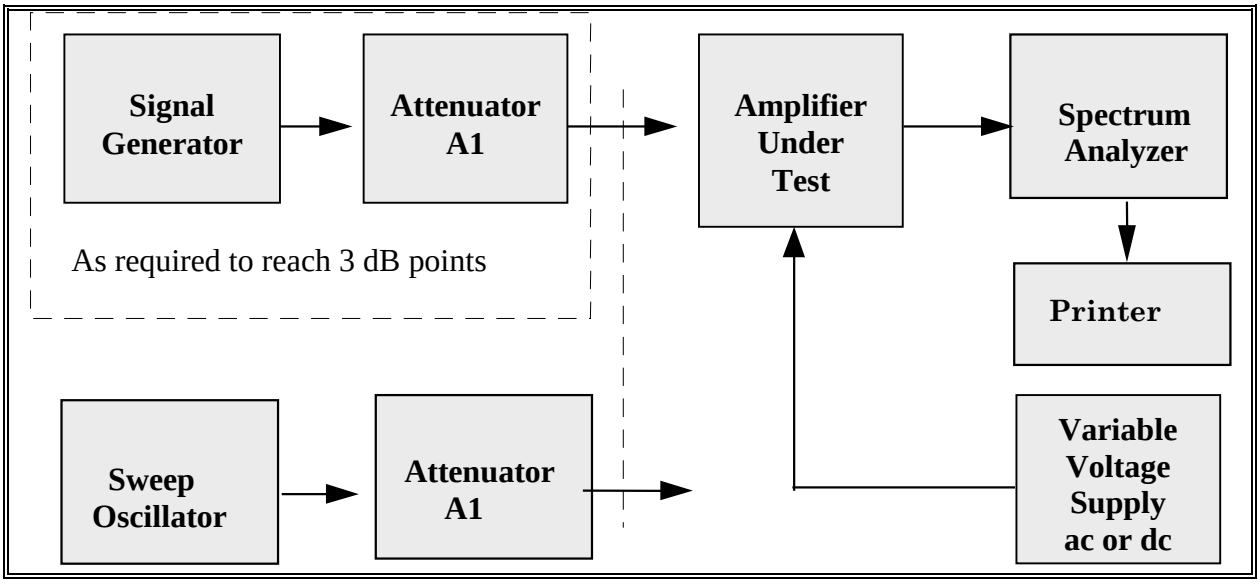

Figure 2-3. Test setup for measurement of bandwidth and small signal power gain (see test 2.2).

2.2.3.2 Conditions. Perform this test under laboratory conditions after a warm-up time of at least 30 minutes. All procedures are conducted with continuous wave signals (unmodulated) into the device under test. Variations in supply voltage will be evaluated.

2.2.3.3 Procedure.

2.2.3.3.1 Set the signal generator frequency to the center of the passband for the device under test.
2.2.3.3.2 Set the attenuator A_1 to provide a preamplifier output at the spectrum analyzer at least 10 dB below the 1-dB compression level of the amplifier as determined in test 2.1.

2.2.3.3.3 Adjust the spectrum analyzer to display the frequency signal in the linear operating range at a convenient reference level on the log scale such as 0 dB. The spectrum analyzer vertical display must be operating in the log mode.

2.2.3.3.4 Disconnect the amplifier and connect the analyzer to the attenuator. Record on Data Sheet 2-2, as the gain of the preamplifier, the difference between the signal now displayed and the reference level in subparagraph 2.2.3.3.3.

2.2.3.3.5 Reconnect the amplifier (Figure 2-3) and tune across the band. Note and record any abnormal changes in gain versus frequency on Data Sheet 2-2. The gain should be constant (±1dB) within the passband of a well-designed amplifier. Continue tuning until response drops approximately 10 dB to ensure that the actual amplifier band edges have been reached. Readjust the signal generator and record the –3-dB points on Data Sheet 2-2.

2.2.3.3.6 Record the data on Data Sheet 2-2 at convenient frequency increments across the band by manually tuning the generator across the band, being careful to record all abnormal gain changes that may occur.

2.2.3.3.7 The same results are obtained using a wide band noise source or sweep generator in place of the signal generator.

NOTE 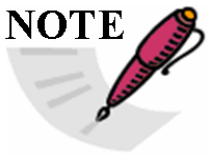	If the sweep generator or noise source does not have an automatic level control (ALC), the level variation versus frequency must be compensated and the data corrected for these variations.

2.2.3.3.8 Set the variable voltage supply to the highest normal operating voltage for which the amplifier is designed. Repeat subparagraphs 2.2.3.3.1 through 2.2.3.3.6.

2.2.3.3.9 Set the variable voltage supply to the lowest voltage specified for the amplifier. Repeat subparagraphs 2.2.3.3.1 through 2.2.3.3.6.

2.2.3.3.10 Set up the equipment in an environmental chamber and operate the amplifier at the highest temperature for which it is designed. Repeat subparagraphs 2.2.3.3.1 through 2.2.3.3.6.

Data Sheet 2-2	**Telemetry RF Preamplifiers**
Test 2.2	**Bandwidth and small signal power gain including temperature and supply voltage variations**

Manufacturer:	**Model:**	**Serial No.:**
Test Personnel:		**Date:**

Amplifier gain determined in subparagraph 2.2.3.3.3

Standard Conditions		**Supply Voltage Variation**		**Temperature Variation**	
Frequency (MHz)	Gain (dB)	Gain Low Supply Voltage (dB)	Gain High Supply Voltage (dB)	Gain High Temp. (dB)	Gain Low Temp. (dB)
Lower 3-dB point (MHz)					
Upper 3-dB point (MHz)					

NOTE	This value should agree with the value determined in Test 2.1, thereby verifying that the equipment is set up properly.

2.2.3.3.11 Set up the equipment in an environmental chamber and operate the amplifier at the lowest temperature for which it is designed. Repeat subparagraphs 2.2.3.3.1 through 2.2.3.3.6.

2.2.3.4 Data Reduction. Plot (or photograph) the data as shown in Figure 2-4 to determine power gain and bandwidth.

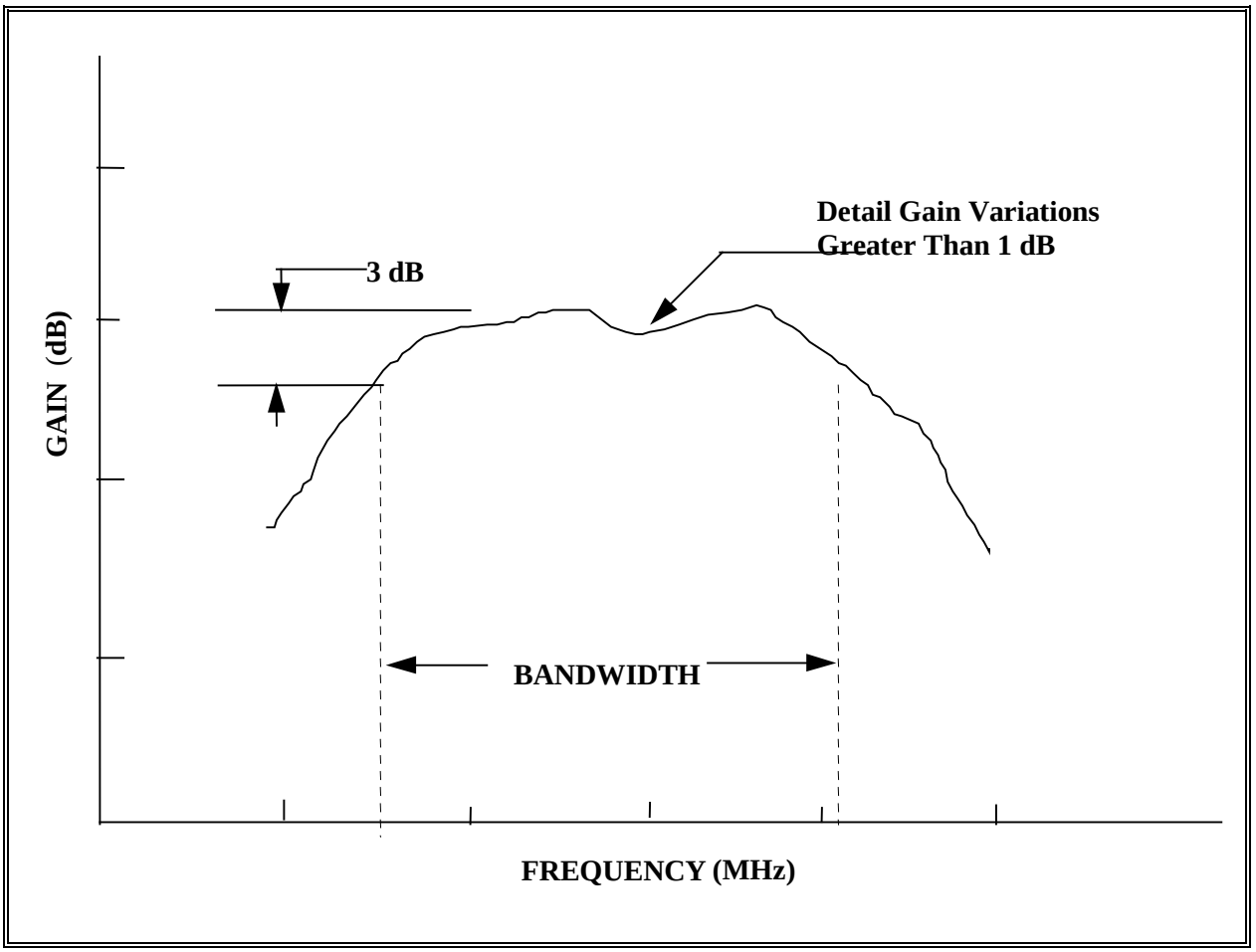

Figure 2-4. Plot of power gain and bandwidth versus frequency (see test 2.2).

2.3 TEST: Intermodulation (IM) Products and Intercept Point (IP)

2.3.1 Purpose. This test measures the IM products and IP of an amplifier. See Appendix A for IM product determination and the IP of an amplifier.

2.3.2 Test Equipment. Two signal generators, isolator, spectrum analyzer, and termination (characteristic impedance).

2.3.3 Test Method.

2.3.3.1 Setup. Connect the test equipment as shown in Figure 2-5.

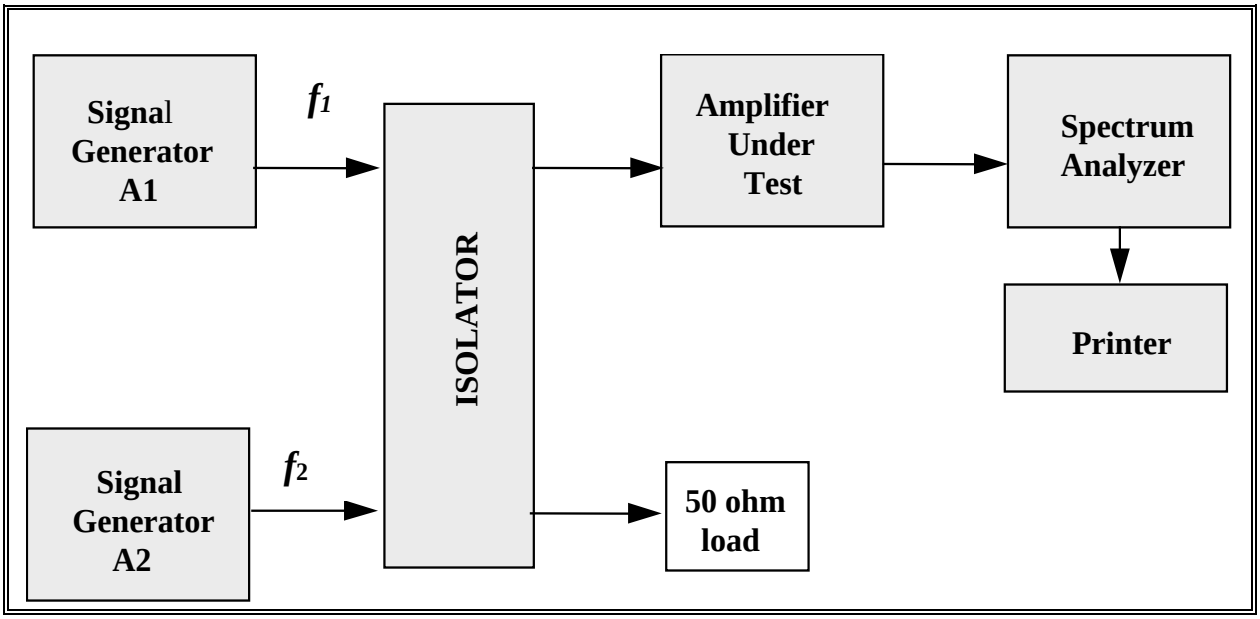

Figure 2-5. Test setup for determination of intercept point (see test 2.3).

2.3.3.2 Conditions. Perform this test under laboratory conditions after a warm-up time of at least 30 minutes.

NOTE	The IP technique is generally accepted as the best approach for describing the overload characteristics of an amplifier. See Appendix A for details on the IP technique.

2.3.3.3 Procedure.

2.3.3.3.1 Set the fundamental signals f_1 and f_2 near the mid-band frequency of the amplifier under test. The spacing of the fundamental signals is not critical as long as the third-order products are within the amplifier passband which must be greater than $3(f_2 - f_1)$.

2.3.3.3.2 Set each of the calibrated signal generator attenuators (A_1 and A_2) to a convenient reference level, for example, –50 dBm. Connect the spectrum analyzer to the isolator and observe the spectrum; only f_1 and f_2 should appear. Increase the output power of both signal generators 10 dB by adjusting A_1 and A_2 equally and verify that the displayed signals increase by 10 dB. This technique ensures that the IM products are not being produced in the isolator or spectrum analyzer.

NOTE	Spectrum analyzers may produce IM products when a high level signal is applied to the first mixer. Refer to the spectrum analyzer instruction manual. An attenuator may not be needed at the analyzer input.

2.3.3.3.3 Reconnect the preamplifier between the isolator and the spectrum analyzer. The amplifier output will be equal to the signal generator output levels (keeping A_1 and A_2 equal) minus the isolator and cable losses plus the amplifier gain.

NOTE	The more attenuation inserted between generators, the greater the isolation. This increased isolation reduces the possibility of intermodulation between signal generators.

2.3.3.3.4 Set the power output to the preamplifier to a convenient power level such that the amplifier is not saturated. Adjust the display device so that the amplitudes of f_1 and f_2 equal a convenient reference level. Adjust the display width to include the two fundamentals and the two third-order IM products as shown in Figure 2-6.

2.3.3.3.5 Record in dBm the magnitude of the fundamental and the highest third-order IM product. Record in dBm the fundamental input power on Data Sheet 2-3.

2.3.3.3.6 Reduce the input to the amplifier in convenient steps (keeping A_1 and A_2 equal) and repeat subparagraph 2.3.3.3.5. Continue to reduce the input until the third-order IM products decrease to the noise floor (see Figure 2-6).

2.3.3.4 Data Reduction

2.3.3.4.1 Plot the magnitude of the fundamental and third-order IM products versus the input power. Plot both quantities in dBm on linear paper. Extend the lines of each plot, as illustrated in Figure 2-7, until they intersect. This is the intersection of the third-order IP.

2.3.3.4.2 When the amplifier third-order output IP (IP_o) has been experimentally determined, the small signal performance of a given amplifier, having two equal amplitude signals present in the passband simultaneously, can be resolved from a graphical representation as illustrated in Figure 2-7.

2.3.3.4.2.1 As an example, the graphical solution in Figure 2-7 shows that the third-order output IP is +10 dBm. Find the third-order IM product for an output signal level of –16 dBm. Draw a vertical line through the –16-dBm point on the fundamental signal line and extend this line until it intersects the third-order IM line. Read approximately –70 dBm on the third-order output scale.

2.3.3.4.2.2 When the IP is known, the third-order IM products for any fundamental signal output can be determined from the following equation:

Power output of the third-order products = IP–3 (IP_o – fundamental output power) dB

Then using the numbers from subparagraph 2.3.3.4.2.1 and Figure 2-7,

Third-Order Output = 10–3 [(10) – (–16)] dBm = –68 dBm

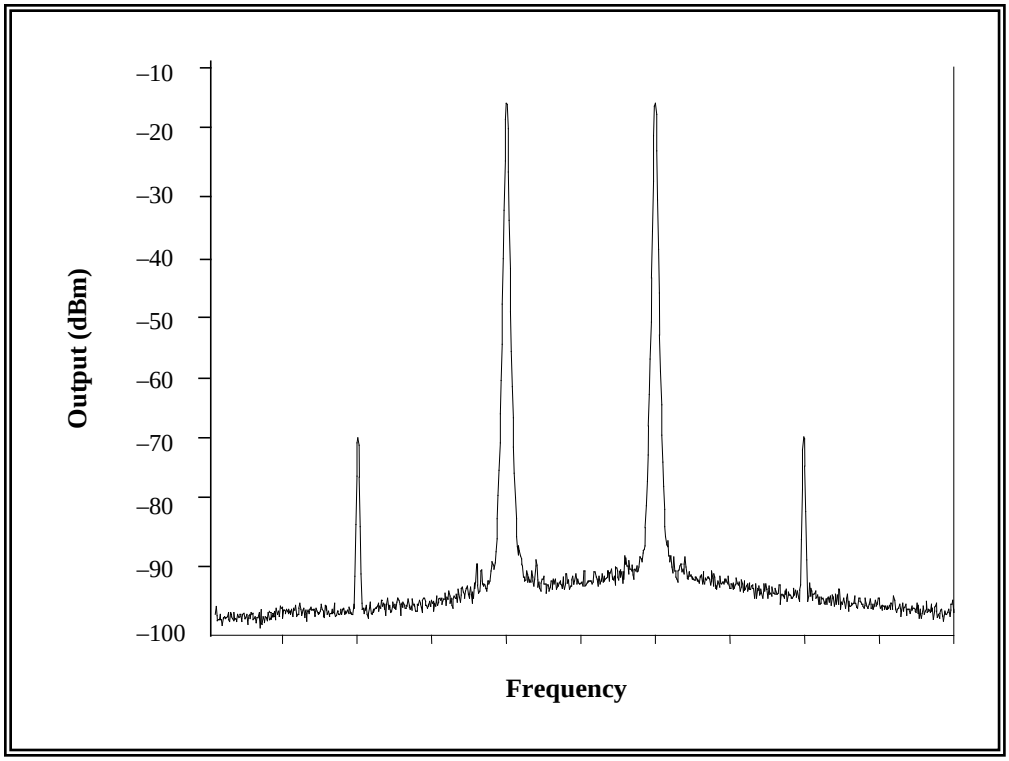

Figure 2-6. Typical display of fundamental and third-order IM products (see test 2.3).

Data Sheet 2-3	**Telemetry RF Preamplifiers**
Test 2.3	**Intermodulation products and intercept point**

Manufacturer:	Model:	Serial No:
Test personnel:		**Date:**

Frequency f_1 MHz _____ Frequency f_2 MHz _____

Fundamental Input Power (dBm)	**Fundamental Output Power** (dBm)	**Third-Order Output Power** (dBm)	**Difference Third-Order and Output** (dBm)	**Second-Order Output Power** (dBm)

NOTE	Amplifiers with passbands greater than one octave may have second-order IM terms present that should be recorded and plotted (see Appendix A).

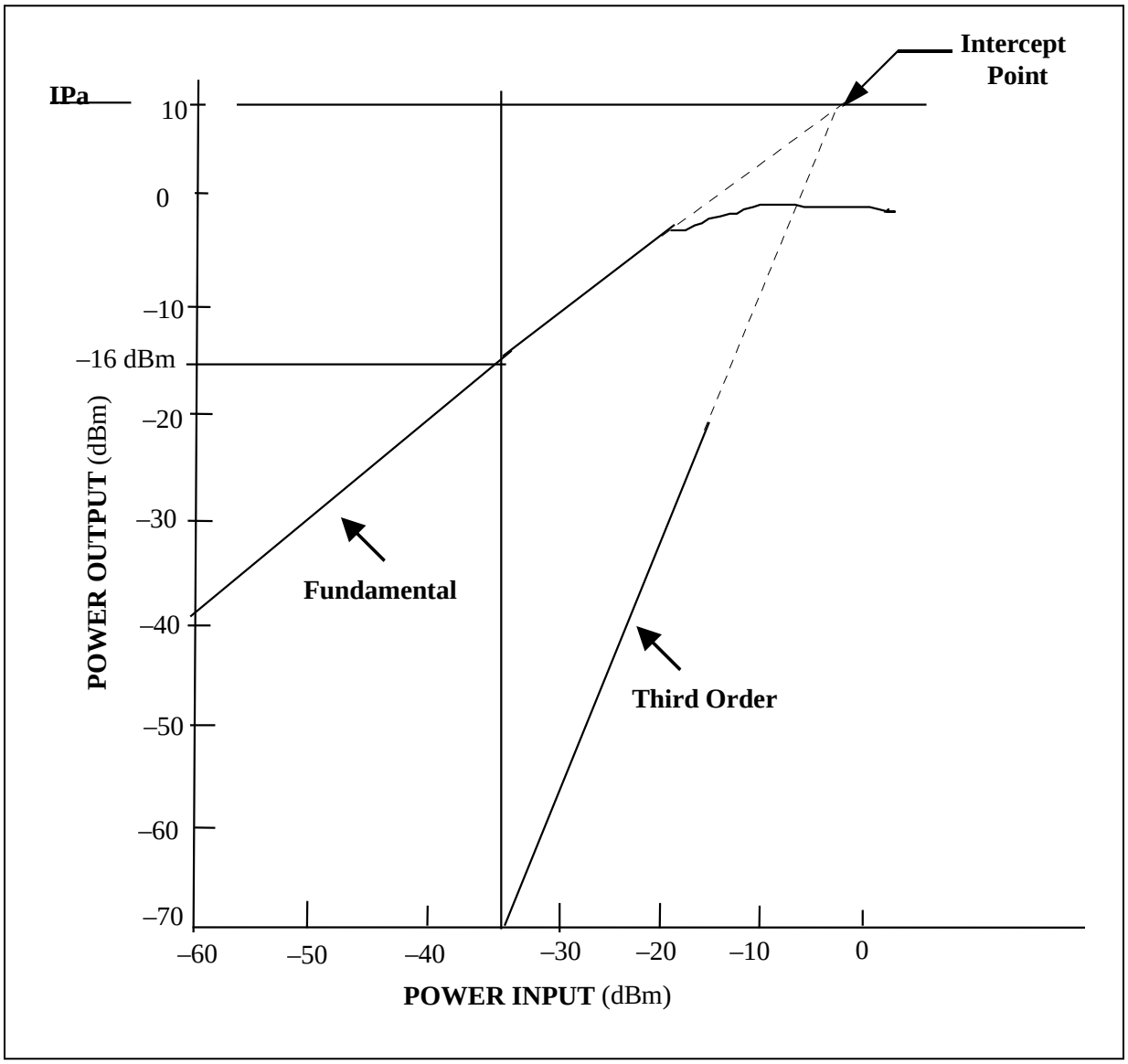

Figure 2-7. Graphical illustration of intercept point (see test 2.3).

2.3.3.4.3 A spurious response nomograph (see Figure 2-8) can be used instead of the graphical representation to determine the small signal performance of a given amplifier when the output IP is known or determined experimentally from subparagraph 2.3.3.4.1.

2.3.3.4.3.1 Place a straight edge on the +10 dBm output IP and at –16 dBm on the fundamental output point.

2.3.3.4.3.2 Read – 68 dBm on the third-order spurious response line.

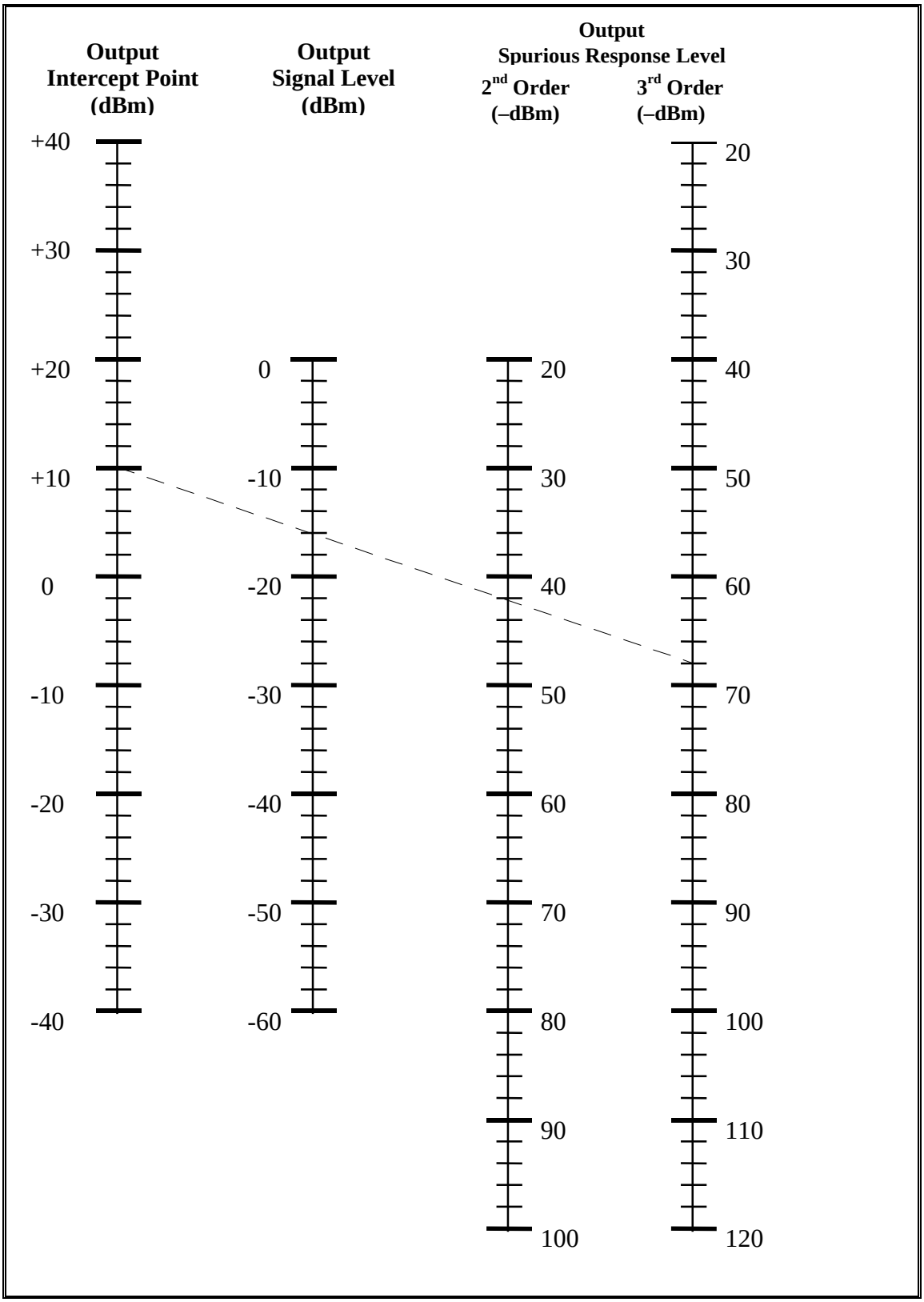

Figure 2-8. Spurious response nomograph (see test 2.3).

2.4 TEST: Voltage Standing Wave Ratio (VSWR) by Return Loss Method

2.4.1 Purpose. This test determines the quality of the impedance match of the device under test by measuring the VSWR using the return loss (RL) method. The test method illustrated here is for a spectrum analyzer; however, a network analyzer could be used.

2.4.2 Test Equipment. Signal generator, 20-dB directional coupler, spectrum analyzer, termination (characteristic impedance), and RF short.

2.4.3 Test Method.

2.4.3.1 Setup. Connect the test equipment as shown in Figure 2-9.

2.4.3.2 Conditions. Perform this test under laboratory conditions after a warm-up time of at least 30 minutes. All procedures are conducted with continuous wave signals (unmodulated) into the device under test. Variations in operating temperature will be evaluated.

NOTE 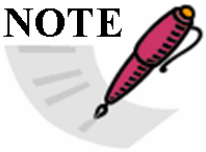	Because the VSWR is a measure of the mismatch between the load and the line, it is possible to measure the voltage reflected from a load to a transmission line with a directional coupler. If the load is replaced by a short circuit whose reflection coefficient is unity (a short circuit reflects all the incident power), the reflected voltage measured through the directional coupler will be increased. The return loss is defined as the ratio of the voltage reflected from the short circuit to the voltage reflected from the load while keeping the input signal constant.

2.4.3.3 Procedure.

2.4.3.3.1 Set the generator frequency to the mid-band frequency of the amplifier to be tested and adjust the calibrated attenuator for a level of about -40 dBm into the directional coupler.

NOTE 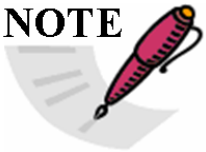	The input level should be at least 10 dB less than the 1-dB compression point obtained in test 2.1.

2.4.3.3.2 Connect the short circuit termination to the coupler and establish a convenient reference level on the spectrum analyzer. A 0-dB reference is very convenient to use with the spectrum analyzer set for a log display.

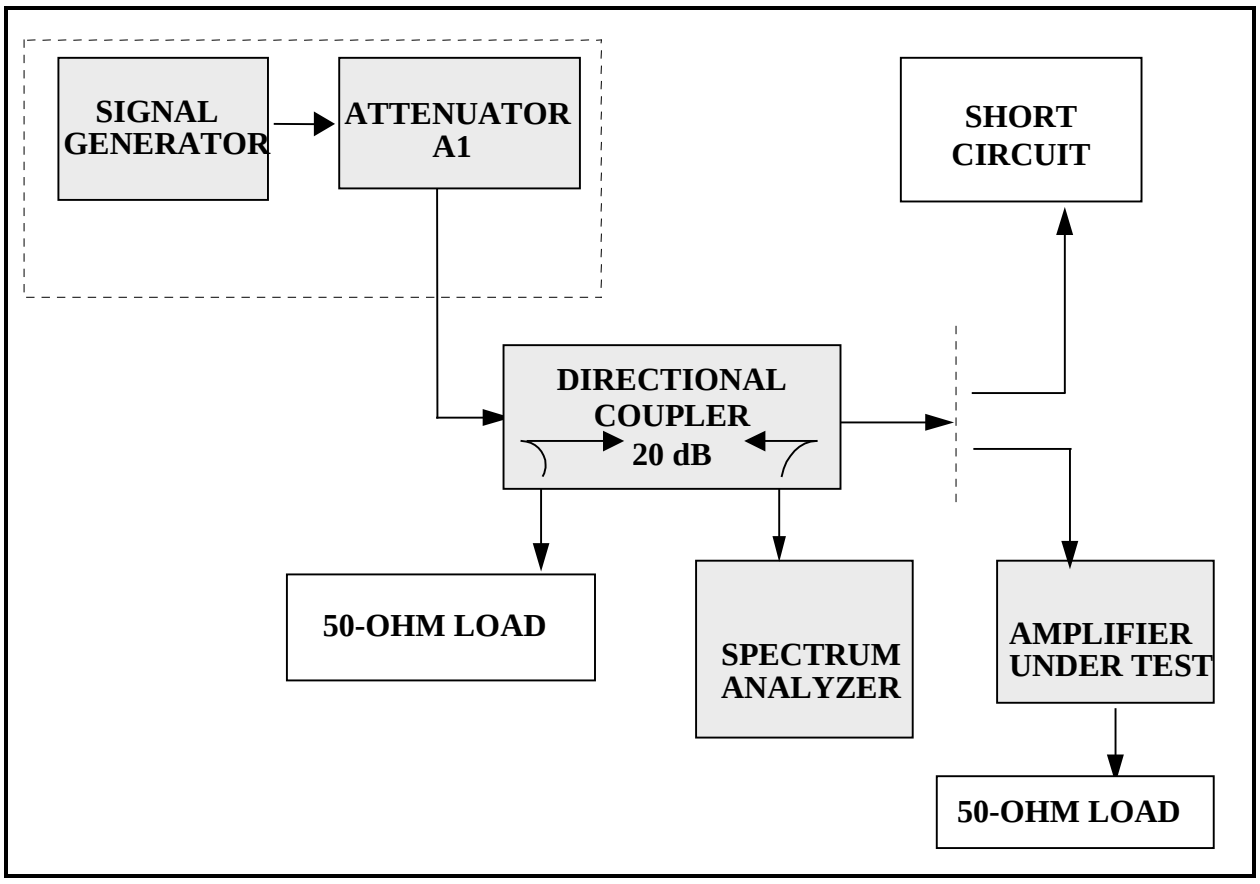

Figure 2-9. Test setup for measurement of return loss (VSWR) (see test 2.4).

2.4.3.3.3 Remove the short circuit termination and connect the amplifier input to the directional coupler. Terminate the amplifier output port with its specified impedance load. Observe the signal level on the spectrum analyzer. The difference between the reference level established in subparagraph 2.4.3.3.2 and the new level observed in dB is the return loss.

2.4.3.3.4 Tune the signal generator across the band pass of the amplifier under test. Record the return loss in dB at convenient increments across the band on Data Sheet 2-4. Note and record any abnormal changes in return loss versus frequency as the generator is tuned.

2.4.3.3.5 Reverse the amplifier connection in the test setup and repeat subparagraphs 2.4.3.3.2 through 2.4.3.3.4 to obtain the amplifier output return loss.

2.4.3.3.6 Repeat subparagraphs 2.4.3.3.2 through 2.4.3.3.5 at high and low operating temperatures.

Data Sheet 2**-4**	**Telemetry RF Preamplifiers**
Test 2.4	**VSWR by return to loss method including temperature variations**

Manufacturer:	**Model:**	**Serial No.:**
Test Personnel:		**Date:**

Frequency (MHz)	**Input Return Loss** (dB)			**Input VSWR** (Table 2-2 or Calculation)			**Output Return Loss** (dB)			**Output VSWR (TABLE 2-2 OR** Calculation)		
	Test 2.4	Test 2.4 Temp.		Test 2.4	Test 2.4 Temp.		Test 2.4	Test 2.4 Temp.		Test 2.4	Test 2.4 Temp.	

2.4.3.4 Data Reduction

2.4.3.4.1 Convert the return loss data to equivalent VSWR by using the dB-to-VSWR values shown in Table 2-2.

TABLE 2-2.
RETURN LOSS TO EQUIVALENT VSWR

dB	VSWR	dB	VSWR	dB	VSWR	dB	VSWR
0		8	2.32	17	1.33	26	1.11
.5	34.75	9	2.10	18	1.29	27	1.09
1	17.39	10	1.92	19	1.25	28	1.08
2	8.72	11	1.78	20	1.22	29	1.07
3	5.85	12	1.67	21	1.20	31	1.06
4	4.42	13	1.58	22	1.17	32	1.05
5	3.57	14	1.50	23	1.15	34	1.04
6	3.01	15	1.43	24	1.13	37	1.03
7	2.61	16	1.38	25	1.12	40	1.02

2.4.3.4.2 The VSWR can be calculated from the return loss, measured in dB, from equations 2-2, 2-3, and 2-4:

$$L_R = 20 \cdot \log (1/\rho) \qquad \text{(Eq. 2-2)}$$

$$\rho = 1 / \text{antilog} (L_R/20) \qquad \text{(Eq. 2-3)}$$

$$VSWR = \frac{1 + \rho}{1 - \rho} \qquad \text{(Eq. 2-4)}$$

Where:
ρ = reflection coefficient of load being measured
L_R = return loss measured

Example:
L_R = 1
ρ = 0.89125

$$\text{VSWR} = \frac{1+\rho}{1-\rho} = \frac{1.89125}{0.10875} = 17.39$$

2.5 TEST: Noise Figure (NF) using Automatic Noise Figure Meter

2.5.1 Purpose. This test measures the noise figure of an amplifier. Noise figure is defined as the ratio (expressed in dB) of the total output noise power per unit bandwidth at a given output frequency when the noise temperature of the input termination is 290ºKto that portion of the output power (same frequency and bandwidth) because of the input termination. See Appendix B for a discussion of noise figure.

2.5.2 Test Equipment. Noise figure meter and noise source.

2.5.3 Test Method. This test measures noise figure using a calibrated noise source and an automatic noise figure meter.

2.5.3.1 Setup. Connect the test equipment as shown in Figure 2-10.

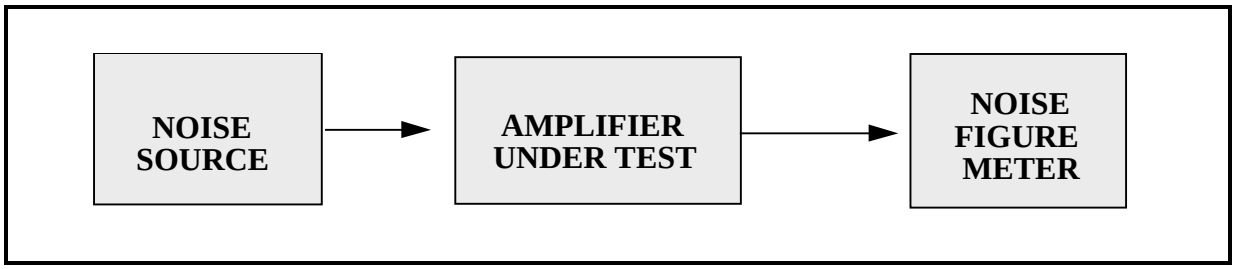

Figure 2-10. Noise figure using automatic noise figure meter (see test 2.5).

2.5.3.2 Conditions. Perform this test under laboratory conditions after the specified warm-up time. Carefully follow operating procedures and cautions in noise figure operation manual. If the noise figure meter does not operate at the amplifier frequency, external frequency translation will be required. The noise figure operation manual will contain recommendations on how to do this translation. Alternate test configurations are shown in test methods 2.6, 3.5, and 4.2.

	Field effect transistor amplifiers can be damaged by noise spikes.

2.5.3.3 Procedure.

2.5.3.3.1 Calibrate noise figure meter using method recommended in the manual.

2.5.3.3.2 Reconnect test equipment as shown in Figure 2-10. Measure the noise figure in 10 MHz steps. Record these values on Data Sheet 2-5.

2.5.3.3.3 Find the maximum noise figure by varying the measurement frequency across the band. Record the frequency and noise figure on Data Sheet 2-5.

2.5.3.4 Data Reduction. Compare the measured values to the specification.

Data Sheet 2-5	**Telemetry Preamplifiers**	
Test 2.5	**Noise figure using automatic noise figure meter**	
Manufacturer:	**Model:**	
Serial No.:	**Frequency range:**	
Test Personnel:	**Date:**	**Location:**

Measurement frequency (MHz)	**Noise Figure** (dB)

2.6 TEST: Impedance Mismatch

2.6.1 Purpose. This test measures the effect of impedance mismatch on the stability of a telemetry amplifier.

2.6.2 Test Equipment. Calibrated mismatch terminations, line stretcher, and spectrum analyzer.

2.6.3 Test Method. This test inserts a known calibrated mismatch at the preamplifier input. The amplifier output is monitored with a spectrum analyzer to detect any spurious signals.

2.6.3.1 Setup. Connect the test equipment as shown in Figure 2-11.

2.6.3.2 Conditions. Perform this test under laboratory conditions after the specified warm-up time.

2.6.3.3 Procedure. Connect the calibrated mismatch that represents the maximum input VSWR specified by the manufacturer to the amplifier input and vary the line stretcher over the full length. Observe the spectrum analyzer for spurious signals and record the level and frequency on Data Sheet 2-6.

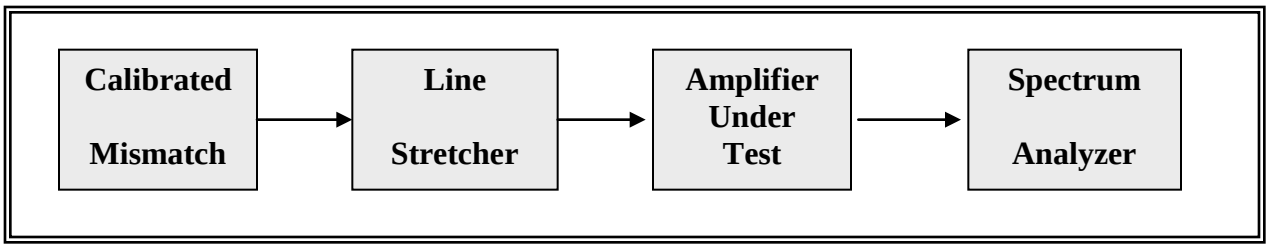

Figure 2-11. Impedance mismatch test setup (see test 2.6).

Data Sheet 2**-6**	**Telemetry RF Preamplifiers**	
Test 2.6	**Impedance mismatch**	
Amplifier Manufacturer:	**Model:**	
Serial No.:	**Frequency range:**	
Test Personnel:	**Date:**	**Location**

Spurious Signals	
Frequency (MHz)	Power (dBm)

CHAPTER 3

TEST PROCEDURES FOR TELEMETRY MULTICOUPLERS

3.0 General

This chapter describes the test procedures used to measure the parameters of telemetry multicouplers. For these test procedures, a multicoupler is defined as a single input, multiple output RF device. There are methods for determining the range of linear operation by measuring gain compression, bandwidth, and small signal power gain including gain variations because of temperature and supply voltage, IM products and IP, VSWR, noise figure, and output isolation. Unless otherwise noted, it is assumed that multicoupler control and power supply inputs are applied as needed.

TABLE 3-1
TEST MATRIX FOR TELEMETRY MULTICOUPLERS

Test & Paragraph Number	Test Description
3.1	Multicoupler gain compression
3.2	Bandwidth and small signal power gain
3.3	Intermodulation (IM) products intercept point (IP)
3.4	VSWR by return loss method
3.5	Noise figure
3.6	Output isolation

3.1 TEST: Multicoupler Gain Compression

3.1.1 Purpose. This test measures the 1-dB compression point which is defined as the point where the gain of a multicoupler has been decreased 1 dB from the small signal gain. The 1-dB compression point can be used to define the upper limit of the multicoupler linear range.

3.1.2 Test Equipment. Signal generator, spectrum analyzer, attenuator, and terminations (characteristic impedance).

3.1.3 Test Method.

3.1.3.1 Setup. Connect the test equipment as shown in Figure 3-1.

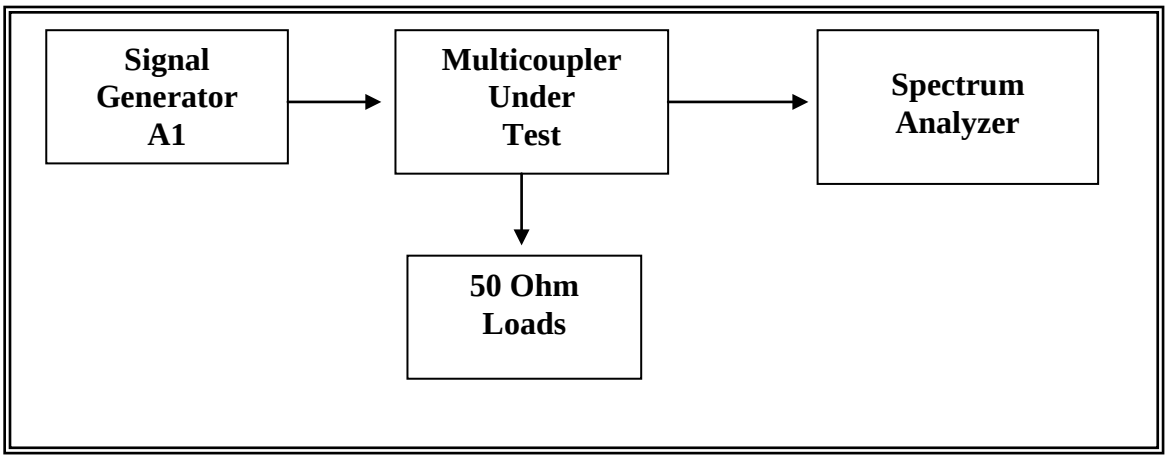

Figure 3-1. Test setup for measurement of multicoupler gain compression level (see test 3.1).

3.1.3.2 Conditions. Perform this test under laboratory conditions after a warm-up time of at least 30 minutes. All procedures are conducted with continuous wave signals (unmodulated) into the device under test. Variations in supply voltage will be evaluated.

3.1.3.3 Procedure.

3.1.3.3.1 Remove the multicoupler under test from the setup shown in Figure 3-1. Set the signal generator frequency to the center of the passband and set the generator attenuator A_1 to a value at least 30 dB below the specified gain compression level of the multicoupler. Adjust attenuator A_1 to a convenient reference level on the analyzer. Record attenuator A_1 initial settings on Data Sheet 3-1.

	Do not exceed the amplifier manufacturer's maximum recommended input power because permanent damage to the amplifier may result.

3.1.3.3.2 Connect the multicoupler between the signal generator and the spectrum analyzer as illustrated in Figure 3-1. Vary attenuator A_1 to return the signal level on the analyzer to the reference level. Record the change in A_1 on Data Sheet 3-1. To ensure that the multicoupler is operating in its linear range, increase the signal generator level an additional 3 dB and verify that the spectrum analyzer level increases 3 dB. If the level does not increase, reduce the signal generator A_1 about 10 dB and repeat the steps above. Record A_1 and the final settings on Data Sheet 3-1.

3.1.3.3.3 Increase input power at convenient signal generator attenuator A_1 steps.

3.1.3.3.4 Record spectrum analyzer readings and signal generator power levels on Data Sheet 3-1.
3.1.3.4 Data Reduction. Plot multicoupler output power versus input power and note where the output level decreases 1 dB from the linear extrapolation of multicoupler response as illustrated in

Figure 3-2. This is the multicoupler gain compression level. Record the input/output gain compression level on Data Sheet 3-1.

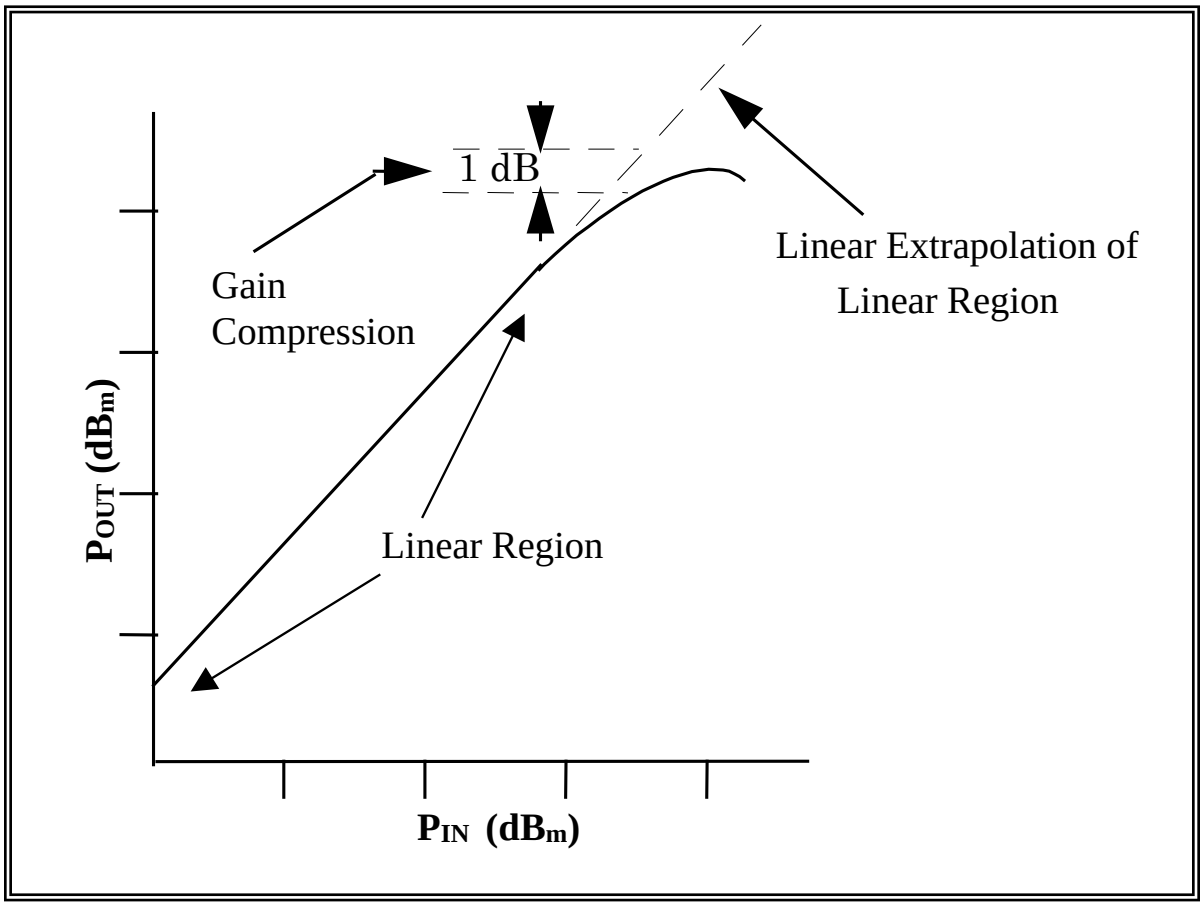

Figure 3-2. Multicoupler gain compression (see tests 3.1 and 3.3).

Data Sheet 3-1	**Telemetry Multicouplers**	
Test 3.1	**Multicoupler gain compression**	
Amplifier Manufacturer:	**Model:**	
Serial No.:	**Frequency range:**	
Test Personnel:	**Date:**	**Location:**
Multicoupler gain determined in subparagraph 3.1.3.3.2		

RF Input Power (A_1) (dBm)	**Power Output** (dBm)

Test frequency: _____

1-dB compression point: P_o _____ dBm P_i _____ dBm

Take additional readings where data slope changes abruptly.

3.2 TEST: Bandwidth and Small Signal Power Gain

3.2.1 Purpose. This test measures the bandwidth which is defined as the range of frequencies over which the amplitude response does not decrease more than 3 dB from the highest point over the specified frequency band of the device under test. The multicoupler small signal power gain is the ratio of output power to input power in the linear operating range and is generally expressed in dB (assuming the impedance of the input/output circuits are properly matched). This gain is expressed by equation 3-2.

$$\text{Gain} = 10 \cdot \log_{10} (P_{out}/P_{in}) \text{ dB} \qquad \text{(Eq. 3-1)}$$

or

$$\text{Gain} = 10 \cdot \log_{10} (P_{out}) - 10 \cdot log_{10} (P_{in}) \text{ dB} \qquad \text{(Eq. 3-2)}$$

3.2.2 Test Equipment. Signal generator, spectrum analyzer, sweep oscillator, attenuator, terminations (characteristic impedance), and alternating current (ac)or dc variable voltage supply.

3.2.3 Test Method.

3.2.3.1 Setup. Connect the test equipment as shown in Figure 3-3. (Either method illustrated is acceptable.)

3.2.3.2 Conditions. Perform this test under laboratory conditions after a warm-up time of at least 30 minutes. All procedures are conducted with continuous wave signals (unmodulated) into the device under test. Variations in supply voltage will be evaluated.

3.2.3.3 Procedure.

3.2.3.3.1 Set the signal generator frequency to the center of the passband for the device under test.

3.2.3.3.2 Set the attenuator A_1 to provide a multicoupler output at the spectrum analyzer at least 10 dB below the 1-dB compression level of the multicoupler as determined in test 3.1.

3.2.3.3.3 Adjust the spectrum analyzer to display the frequency line in the linear operating range at a convenient reference level on the log scale such as 0 dB. The spectrum analyzer vertical display must be operating in the log mode. Record the attenuator setting and analyzer level on Data Sheet 3-2.

3.2.3.3.4 Disconnect the multicoupler and connect the analyzer to the attenuator. Record in dB the difference between the signal now displayed and the reference level in subparagraph 3.2.3.3.3 as the gain of the multicoupler.

NOTE	This value should agree with the value determined in test 3.1 verifying that the equipment is set up properly.

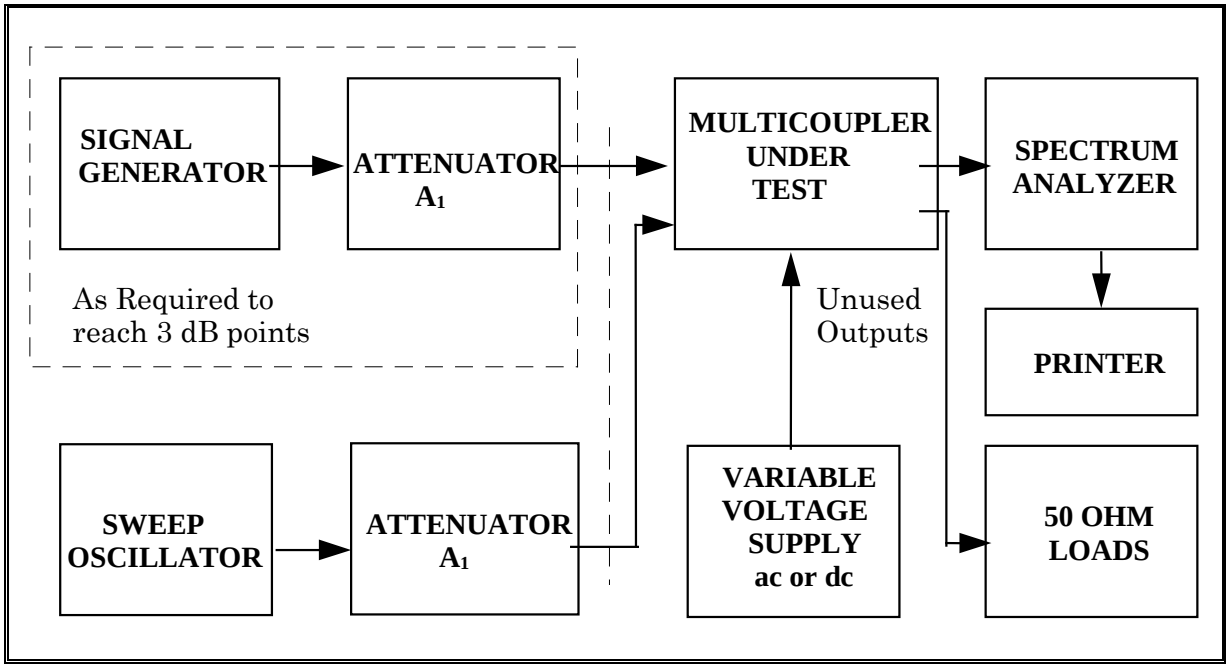

Figure 3-3. Test setup for measurement of bandwidth and small signal power gain (see test 3.2).

3.2.3.3.5 Reconnect the multicoupler (Figure 3-3) and tune across the band. Note and record any abnormal changes in gain versus frequency on Data Sheet 3-2. The gain should be constant (±1 dB) within the passband of a well designed multicoupler. Continue tuning until response drops approximately 10 dB to ensure that the actual multicoupler band edges have been reached. Record the –10 dB point on Data Sheet 3-2. Readjust the signal generator frequency and record the -3-dB points on Data Sheet 3-2. Repeat this measurement for the other band edge.

3.2.3.3.6 Record the data on the data sheet at convenient frequency increments across the band by manually tuning the generator across the band, being careful to record all abnormal gain changes that may occur.

3.2.3.3.7 The same results are obtained using a wide band noise source or sweep generator in place of the signal generator.

NOTE	If the sweep generator or noise source does not have an automatic level control, the level variation versus frequency must be compensated and the data corrected for these variations.

Data Sheet 3-2	Telemetry Multicouplers
Test 3.2	**Bandwidth and small signal power gain including temperature and supply voltage variations**

Amplifier Manufacturer:		**Model:**	
Serial No.:			
Test Personnel:		**Date:**	
Initial conditions: Attenuator setting		**Analyzer level**	
Multicoupler gain determined in subparagraph 3.2.3.3.4			

Standard Conditions		**Supply Voltage Variation**		**Temperature Variation**	
Frequency (MHz)	Gain (dB)	Gain High Supply Voltage (dB)	Gain Low Supply Voltage (dB)	Gain High Temp. (dB)	Gain Low Temp. (dB)
Lower 10-dB Point (MHz)					
Lower 3-dB Point (MHz)					
Upper 3-dB Point (MHz)					
Upper 10-dB Point (MHz)					

3.2.3.3.8 Set the variable voltage supply to the highest normal operating voltage for which the multicoupler is designed. Repeat subparagraphs 3.2.3.3.1 through 3.2.3.3.6.

3.2.3.3.9 Set the variable voltage supply to the lowest voltage specified for the multicoupler. Repeat subparagraphs 3.2.3.3.1 through 3.2.3.3.6.

3.2.3.3.10 Set up the equipment in an environmental chamber and operate the multicoupler at the highest temperature for which it is designed. Repeat subparagraphs 3.2.3.3.1 through 3.2.3.3.6.

3.2.3.3.11 Set up the equipment in an environmental chamber and operate the multicoupler at the lowest temperature for which it is designed. Repeat subparagraphs 3.2.3.3.1 through 3.2.3.3.6.

3.2.3.4 Data Reduction. Plot (or photograph) the data as shown in Figure 3-4 to determine power gain and bandwidth.

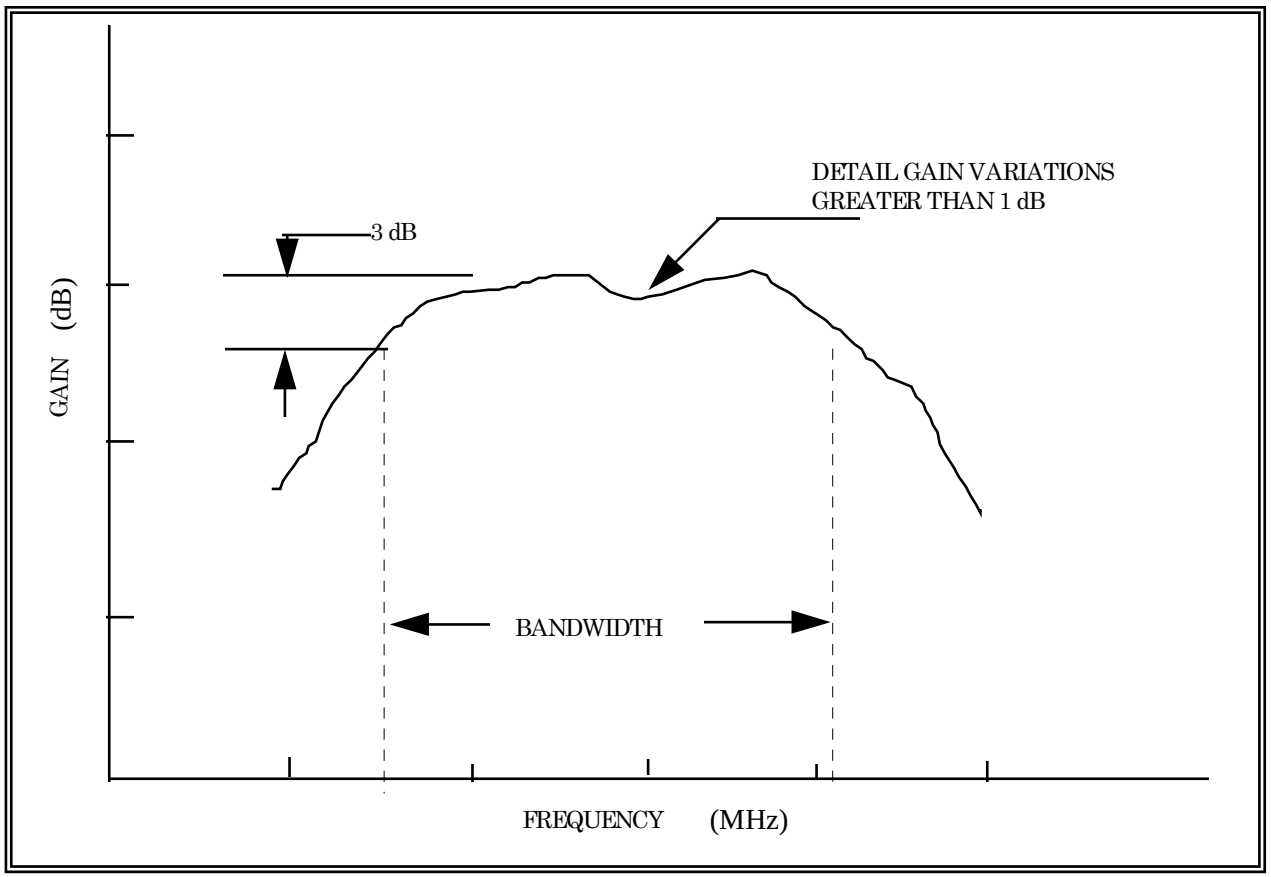

Figure 3-4. Plot of power gain and bandwidth versus frequency (see test 3.2).

3.3 TEST: Intermodulation (IM) Products Intercept Point (IP)

3.3.1 Purpose. This test measures the IM products and IP of a multicoupler. Intermodulation products are generated whenever two or more signals are input to an active device. Products of high-level input signals can obscure desired output signals. Usually, third-order products are the only interfering signals of concern; however, higher products may affect reception of very low-level signals in wide band systems. The intercept point is a figure of merit for evaluating the dynamic range of active devices and determining product output power. See paragraph 3.3.3.4.2.2 for an example of calculation of third-order product power. See Appendix A for a discussion of intermodulation (IM) products and intercept point (IP).

3.3.2 Test Equipment. Two signal generators, isolator, spectrum analyzer, and termination (characteristic impedance).

3.3.3 Test Method.

3.3.3.1 Setup. Connect the test equipment as shown in Figure 3-5.

3.3.3.2 Conditions. Perform this test under laboratory conditions after a warm-up time of at least 30 minutes. All procedures are conducted with continuous wave signals (unmodulated) into the device under test.

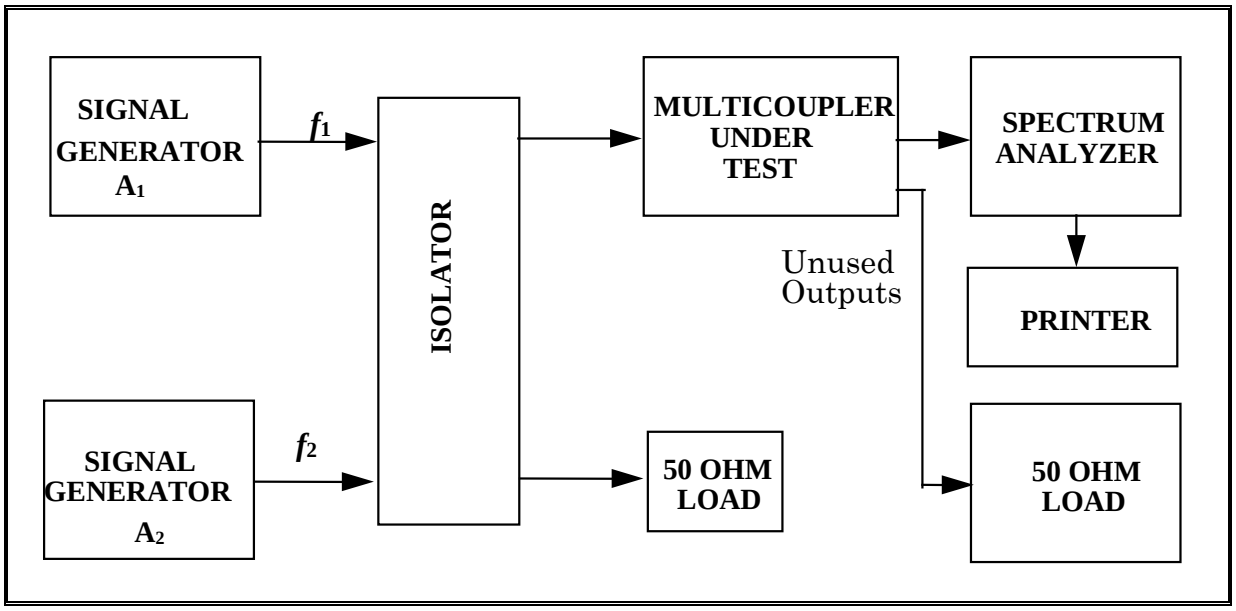

Figure 3-5. Test setup for determination of intercept point (see test 3.3).

NOTE	The IP technique is generally accepted as the best approach for describing the overload characteristics of a multicoupler. See Appendix A for details on the IP technique.

3.3.3.3 Procedure.

3.3.3.3.1 Set the fundamental signals f_1 and f_2 near the mid-band frequency of the multicoupler under test. The spacing of the fundamental signals is not critical as long as the third-order products are within the multicoupler passband which must be greater than $3(f_2 - f_1)$.

3.3.3.3.2 Set each of the calibrated signal generator attenuators (A_1 and A_2) to a convenient reference level, for example, –50 dBm. Connect the spectrum analyzer to the hybrid output and observe the spectrum. Only f_1 and f_2 should appear. Increase the output power of both signal generators 10 dB by adjusting A_1 and A_2 equally, and verify that the displayed signals increase by 10 dB. This technique ensures that the IM products are not being produced in the hybrid or spectrum analyzer.

NOTE	Spectrum analyzers may produce IM products when a high level signal is applied to first mixer. Refer to the spectrum analyzer instruction manual. An attenuator may be needed at the analyzer input.

3.3.3.3.3 Reconnect the multicoupler between the isolator and the spectrum analyzer. With the isolator, the multicoupler output will be equal to the signal generator output power levels (keeping A_1 and A_2 equal) plus the multicoupler gain. Increase the output power of both signal generators (keeping A_1 and A_2 equal) and verify that the output of the multicoupler is within the linear operating region (see Figure 3-2).

NOTE	The more attenuation inserted between generators, the greater the isolation. This increased isolation reduces the possibility of IM between signal generators.

3.3.3.3.4 Set the power input to the input of the multicoupler to –20 dBm. Adjust the display device so that the amplitudes of f_1 and f_2 are equal to a convenient reference level. Adjust the display width to include the two fundamentals and the two third-order IM products as shown in Figure 3-6.

3.3.3.3.5 Record in dB the difference in magnitude between the fundamental and the third-order IM products. Record in dBm the fundamental input power on Data Sheet 3-3.

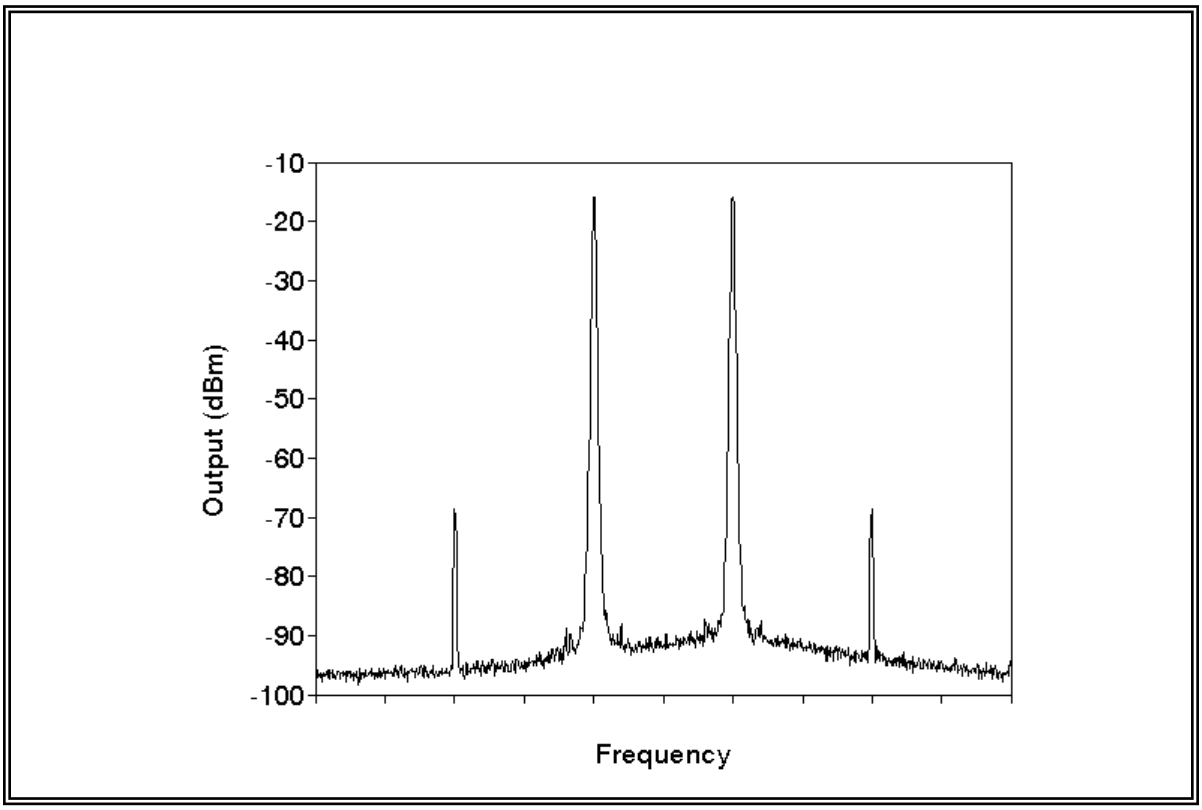

Figure 3-6. Typical display of fundamental and third-order intermodulation products (see test 3.3).

3.3.3.3.6 Reduce the input to the multicoupler in convenient steps, keeping A_1 and A_2 equal, and repeat subparagraphs 3.3.3.3.4 and 3.3.3.3.5. Continue to reduce the input until the third-order IM products decrease to the noise floor (see Figure 3-6).

3.3.3.4 Data Reduction

3.3.3.4.1 Plot the magnitude of the fundamental and third-order IM products versus the input power. Plot both quantities in dBm on linear paper. Extend the lines of each plot as illustrated in Figure 3-7 until they intersect; this is the IP.

NOTE	Multicouplers with passbands greater than one octave may have second-order IM terms present that should be recorded and plotted (see Appendix A).

3.3.3.4.2 When the multicoupler third-order output IP (IP_O) has been experimentally determined, the small signal performance of a given multicoupler, having two equal amplitude signals present in the passband simultaneously, is resolved from a graphical representation as illustrated in Figure 3-7.

3.3.3.4.2.1 As an example, the graphical solution in Figure 3-7 shows that the third-order output IP is +10 dBm. Find the third-order IM product for an output signal level of –16 dBm. Draw a vertical line through the –16 dBm point on the fundamental IM line and extend this line until it intersects the third-order IM line. Read –70 dBm on the third-order output scale.

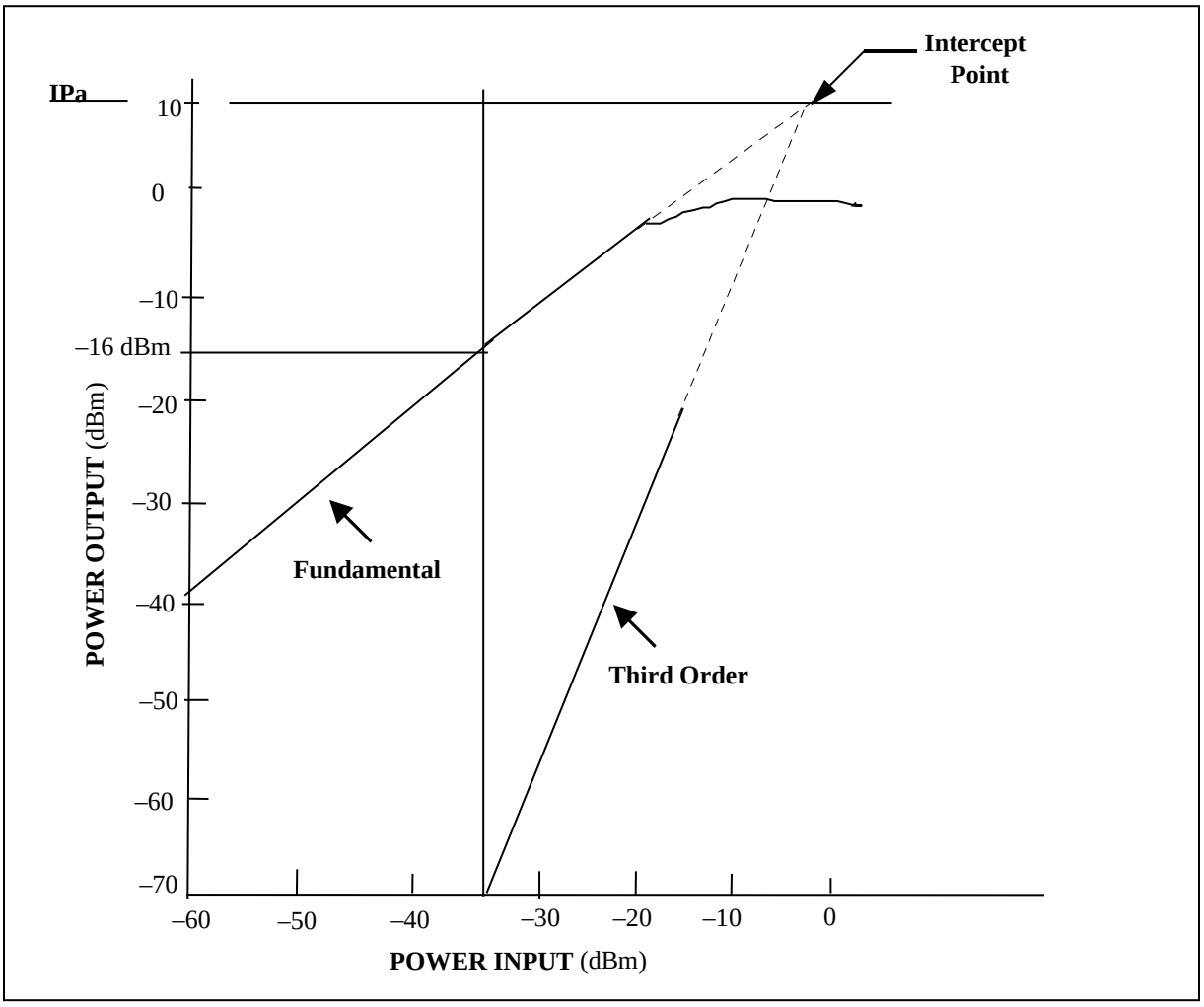

Figure 3-7. Graphical illustration of intercept point (see test 3.3).

Data Sheet 3-3	**Telemetry Multicouplers**
Test 3.3	**Intermodulation products and intercept point**
Amplifier Manufacturer:	**Model:**
Serial No.:	**Date:**
Test Personnel:	

Frequency f_1 MHz _____ Frequency f_2 MHz _____

Fundamental Input Power (dBm)	Fundamental Output Power (dBm)	Third-Order Output Power (dBm)	Difference Third-Order and Output (dBm)	Second-Order Output Power (dBm)

3.3.3.4.2.2 When only the IP is known, determine the third-order IM products for any fundamental signal output from the following equation:

Power output of the third-order products = 3 (IP_o – fundamental output power) dB below IP. Using the numbers from subparagraph 3.3.3.4.2.1 and Figure 3-7, calculate

Third-Order Output = 3[(10) – (–16)]dB (Eq. 3-3)
= 78 dB below IP_o
Third-Order Output = –68 dBm.

3.3.3.4.3 A spurious response nomograph (see Figure 3-8) can be used rather than the graphical representation to determine the small signal performance of a given multicoupler when the output IP is known or determined experimentally from subparagraph 3.3.3.4.1.

3.3.3.4.3.1 Place a straight edge on the +10 dBm output and at –16dBm on the fundamental output point.

3.3.3.4.3.2 Read –68 dBm on the third-order spurious response line.

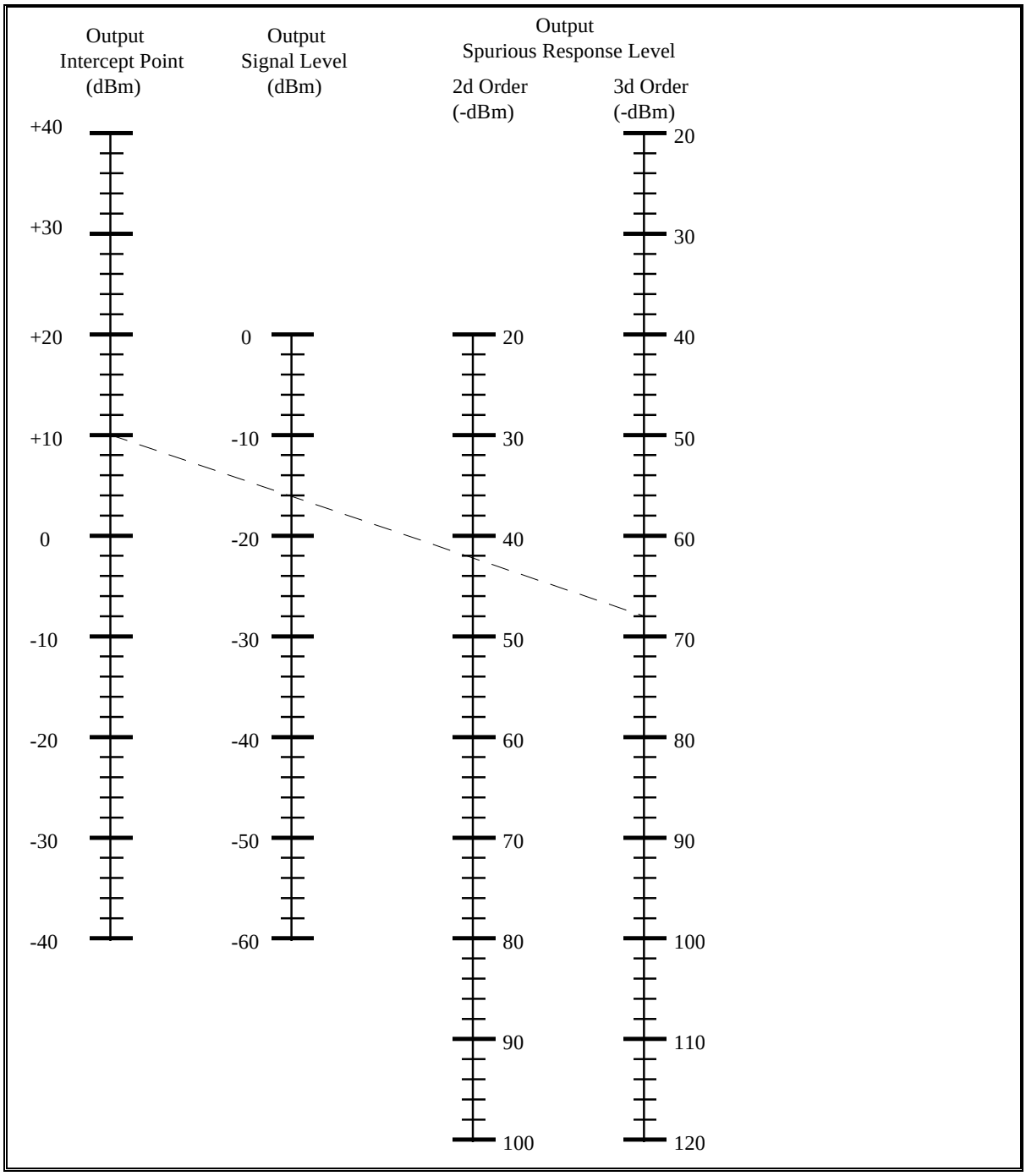

Figure 3-8. Spurious response nomograph (see test 3.3).

3.4 TEST: VSWR by Return Loss Method

3.4.1 Purpose. This test determines the quality of the impedance match of the device under test by measuring the voltage standing wave ratio (VSWR) using the return loss method. The VSWR allows estimation of the amount of power transferred through or reflected from a device connection as:

$$\text{POWER TRANSFERRED (\%)} = 100 (1 - \rho^2)$$

Where: ρ is the voltage reflection coefficient.

See paragraph 3.4.3.4.2 for calculation of ρ from return loss.

3.4.2 Test Equipment. Use a network analyzer with calibration kit. Alternately, use a signal generator, 20-dB directional coupler, spectrum analyzer, termination (characteristic impedance), and RF short.

3.4.3 Test Method.

3.4.3.1 Setup. Connect the test equipment as shown in Figure 3-9a or Figure 3-9b.

3.4.3.2 Conditions. Perform this test under laboratory conditions after a warm-up time of at least 30 minutes. All procedures are conducted with continuous wave signals (unmodulated) into the device under test. Variations in operating temperature will be evaluated.

NOTE 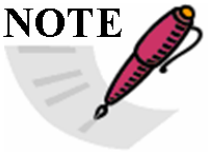	The input level should be 10 dB less than the 1-dB compression point obtained in test 3.1.

3.4.3.3 Procedure. Use paragraphs 3.4.3.3.1 to 3.4.3.3.6 for the setup in Figure 3-9a. Use paragraphs 3.4.3.3.7 to 3.4.3.3.12 for the setup in Figure 3-9b.

3.4.3.3.1 Setup the network analyzer impedance, frequency range, number of points, and power level to the requirements of the multicoupler to be tested.

3.4.3.3.2 Calibrate the network analyzer for a S_{11} one-port test. Use the appropriate calibration kit to minimize use of coaxial adapters.

3.4.3.3.3 Setup the network analyzer display for either return loss (LOG MAG S_{11}) or VSWR. Set the display for the desired scale range. Verify calibration accuracy by observing calibration load data on the display. Remove the calibration load and connect the multicoupler input to the directional coupler. Terminate the multicoupler output ports with its specified impedance load. Observe the measurement level on the analyzer.

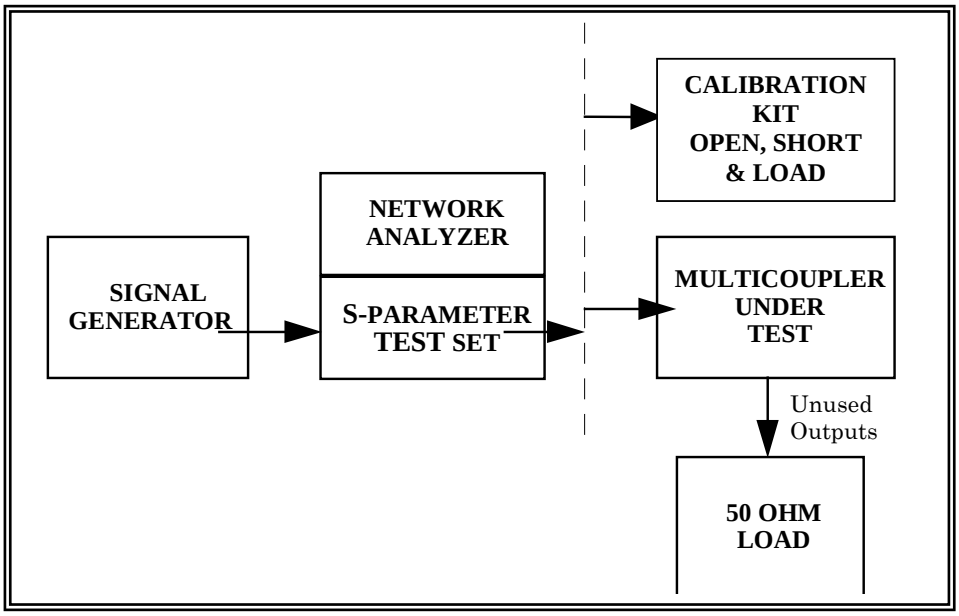

Figure 3-9a. Test setup for measurement of return loss (VSWR) (see test 3.4).

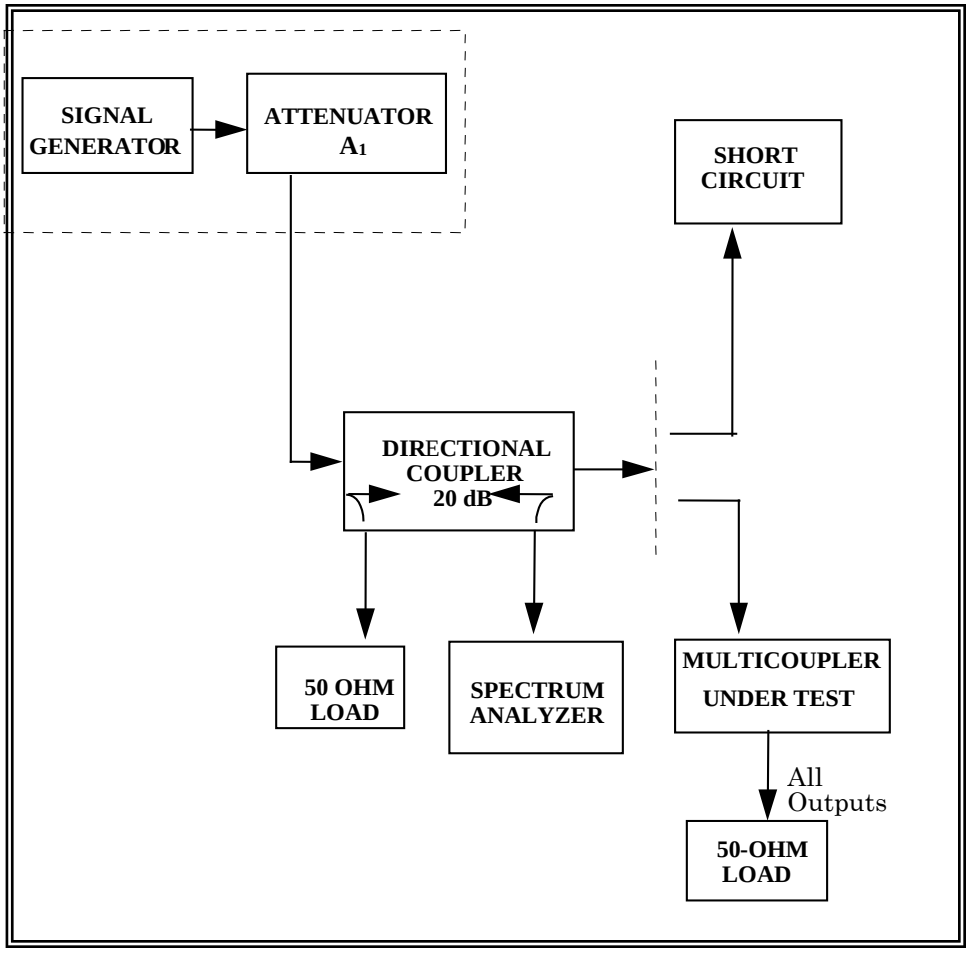

Figure 3-9b. Alternate test setup for measurement of return loss (VSWR) (see test 3.4)

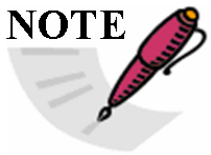	Since the VSWR is a measure of the mismatch between the load and the line, it is possible to measure the voltage reflected from a load to a transmission line with a directional coupler. If the load is replaced by a short circuit whose reflection coefficient is unity, the reflected voltage measured through the directional coupler will be increased. (A short circuit reflects all the incident power.) The return loss is defined as the ratio of the voltage reflected from the short circuit to the voltage reflected from the load while keeping the input signal constant.

3.4.3.3.4 Move the network analyzer markers across the band pass of the multicoupler under test. Record the return loss in dB or VSWR at convenient increments across the band on Data Sheet 3-4. Note and record any abnormal changes in data versus frequency as the marker is moved.

3.4.3.3.5 Reverse the multicoupler connection in the test setup and repeat subparagraphs 3.4.3.3.3 and 3.4.3.3.4 to obtain the multicoupler output return loss or VSWR for each output.

3.4.3.3.6 Repeat subparagraphs 3.4.3.3.3 through 3.4.3.3.5 at high and low operating temperatures.

Alternate Procedure

3.4.3.3.7 Set the generator frequency to the mid-band frequency of the multicoupler to be tested and adjust the calibrated attenuator for a level of about –40 dBm into the directional coupler.

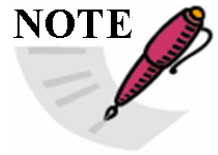	The input level should be 10 dB less than the 1-dB compression point obtained in test 3.1.

3.4.3.3.8 Connect the short circuit termination to the coupler and establish a convenient reference level on the spectrum analyzer. A 0-dB reference is very convenient to use with the spectrum analyzer set for a log display.

3.4.3.3.9 Remove the short circuit termination and connect the multicoupler input to the directional coupler. Terminate the multicoupler output ports with its specified impedance load. Observe the signal level on the spectrum analyzer. The difference between the reference level established in subparagraph 3.4.3.3.8 and the new level observed in dB is the return loss.

3.4.3.3.10 Tune the signal generator across the band pass of the multicoupler under test. Record the return loss in dB at convenient increments across the band on Data Sheet 3-4. Note and record any abnormal changes in return loss versus frequency as the generator is tuned.

3.4.3.3.11 Reverse the multicoupler connection in the test setup and repeat subparagraphs 3.4.3.3.8 through 3.4.3.3.10 to obtain the multicoupler output return loss for each output.

3.4.3.3.12 Repeat subparagraphs 3.4.3.3.8 through 3.4.3.3.11 at high and low operating temperatures.

Data Sheet 3-4	**Telemetry Multicouplers**
Test 3.4	**VSWR by return loss method including temperature variations**
Amplifier Manufacturer:	**Model:**
Serial No.:	
Test Personnel:	**Date:**

Frequency (MHz)	**Input Return Loss** (dB)			**Input VSWR Table 3-1 or Calculation**			**Output Return Loss** (dB)			**Output VSWR Table 3-1 or Calculation**		
	Test 3.4	Test 3.4 Temp		Test 3.4	Test 3.4 Temp		Test 3.4	Test 3.4 Temp		Test 3.4	Test 3.4 Temp	
		H	L		H	L		H	L		H	L

3.4.3.4 Data Reduction.

3.4.3.4.1 Convert the return loss data to equivalent VSWR by using the dB-to-VSWR values shown in table 3-2.

3.4.3.4.2 The VSWR can be calculated from the return loss, measured in dB, using the equations:

$$L_R = 20 \log \frac{1}{\rho} . \qquad \text{(Eq. 3-4)}$$

Therefore: $$\rho = \frac{1}{anti \log (L_R / 20)} \qquad \text{(Eq. 3-5)}$$

Then: $$VSWR = \frac{1+\rho}{1-\rho} \qquad \text{(Eq. 3-6)}$$

Where:

L_R = return loss measured

ρ = reflection coefficient of load being measured

TABLE 3-2. RETURN LOSS TO EQUIVALENT VSWR

dB	VSWR	dB	VSWR	dB	VSWR	dB	VSWR
0	∞	8	2.32	17	1.33	26	1.11
.5	34.78	9	2.10	18	1.29	27	1.09
1	17.39	10	1.92	19	1.25	28	1.08
2	8.72	11	1.78	20	1.22	29	1.07
3	5.85	12	1.67	21	1.20	31	1.06
4	4.42	13	1.58	22	1.17	32	1.05
5	3.57	14	1.50	23	1.15	34	1.04
6	3.01	15	1.43	24	1.13	37	1.03
7	2.61	16	1.38	25	1.12	40	1.02

3.5 TEST: Noise Figure

3.5.1 Purpose. This test measures the noise figure, which is the ratio of the input, signal to noise ratio divided by the output signal to noise ratio expressed in dB. Alternately, the average noise figure is the ratio of the total noise power delivered to the load when the input is at 290ºK at all frequencies to that portion of noise power generated by the input termination, expressed in dB (reference IEEE Dictionary Standard 100-1988). The noise figure of the multicoupler is important because it is one factor in determining the sensitivity of the receiving system. System sensitivity establishes the lower limit of system dynamic range or range of linear operation. See Appendix B for a discussion of noise figure.

3.5.2 Test Equipment. Noise figure meter or noise figure system, noise source, dc block, 10-dB attenuator, receiver, and terminations (characteristic impedance).

3.5.3 Test Method.

3.5.3.1 Setup. Connect the test equipment as shown in Figure 3-10a or Figure 3-10b.

Figure 3-10a: Do not remove the dc block or the 10-dB pad between the noise source and the multicoupler under test because the multicoupler may be damaged.

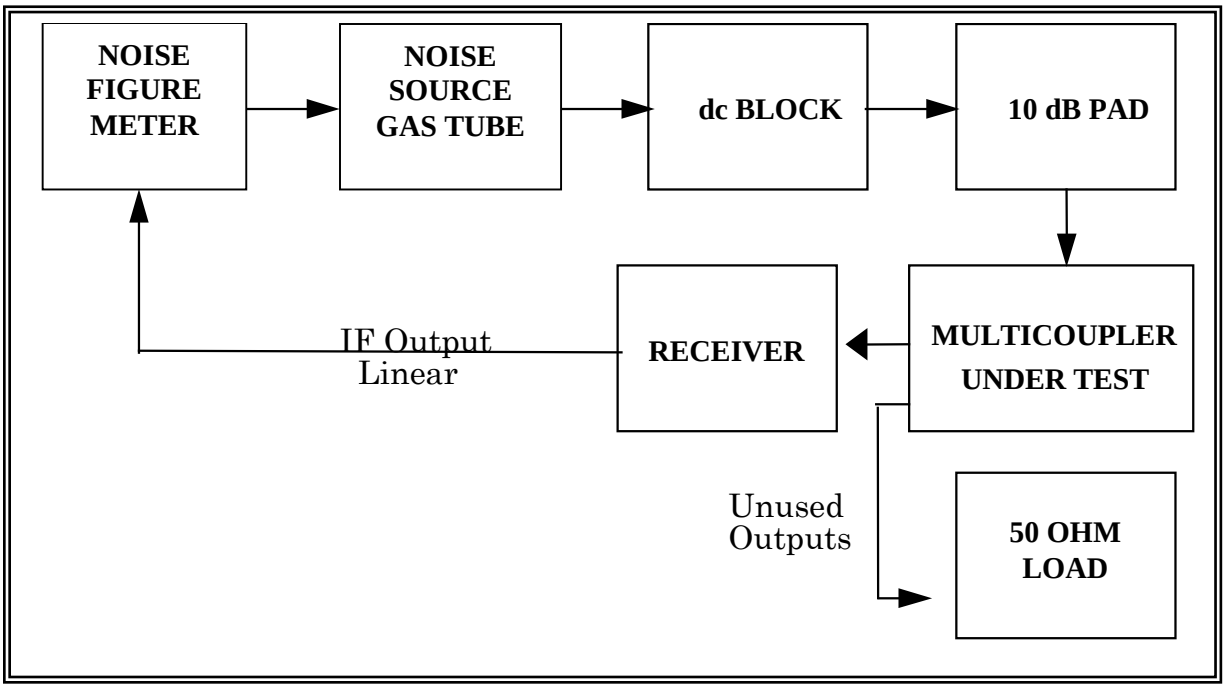

Figure 3-10a. Test setup for measurement of noise figure (see test 3.5).

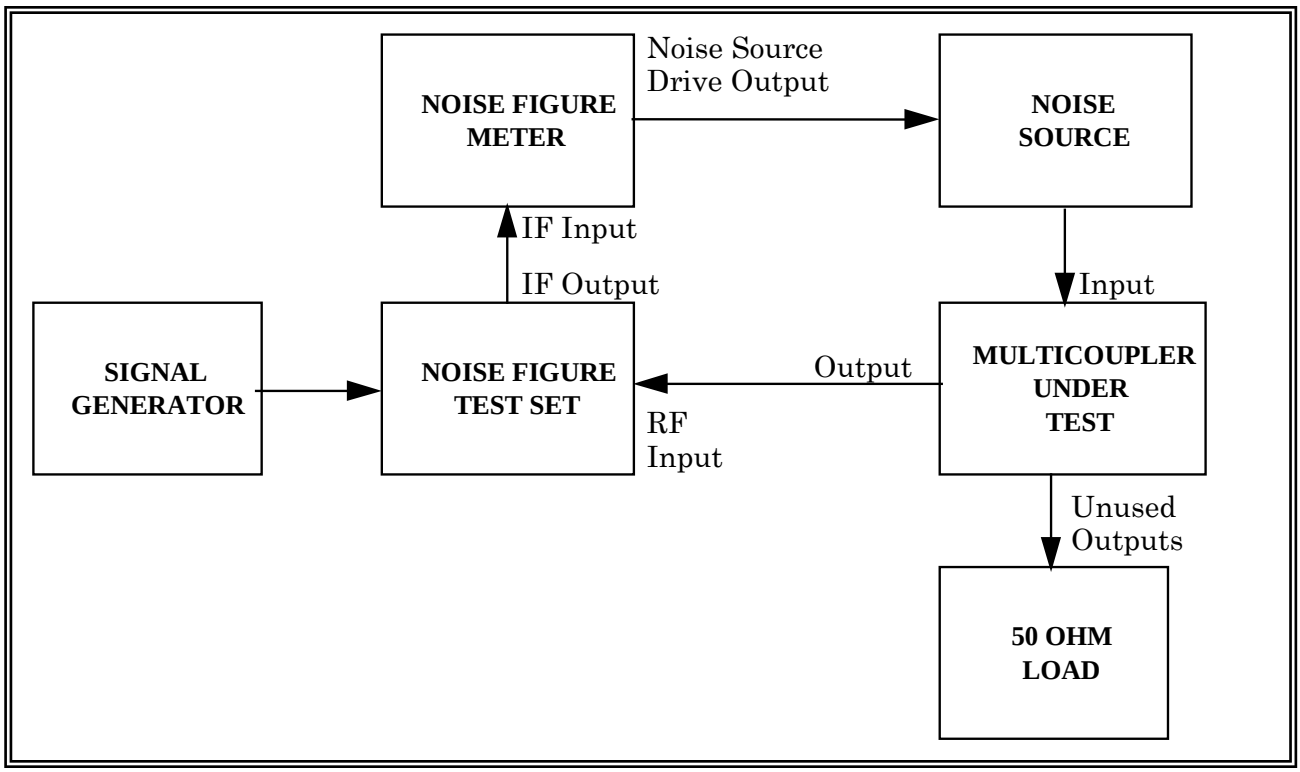

Figure 3-10b. Test setup for measurement of noise figure (see test 3.5).

3.5.3.2 Conditions. Perform this test under laboratory conditions after a warm-up time of at least 30 minutes. Variations in supply voltage and operating temperature will be evaluated.

3.5.3.3 Procedure.

3.5.3.3.1 In Figure 3-10a, set the receiver for a long time constant or set it in the AGC disable mode with the manual gain adjusted for linear operation. In Figure 3-10b, ensure the correct noise source excess noise ratio (ENR) data are stored in the NF meter.

3.5.3.3.2 Measure the NF. Refer to the operating instructions of the noise figure meter. Make this measurement by continuously tuning the receiver across the band of interest.

3.5.3.3.3 Record the NF reading in dB on Data Sheet 3-5.

NOTE	If the device under test is to be used in varying atmospheric conditions, it will be necessary to initially evaluate the device under those conditions. Place the device in a chamber where climatic conditions can be controlled and varied, and repeat some or all of the previous tests.

Data Sheet 3-5	Telemetry Multicouplers
Test 3.5	**Noise figure**
Amplifier Manufacturer:	**Model:**
Serial No.:	
Test Personnel:	**Date:**

Frequency (MHz)	**Noise Figure** (dB)

3.6 TEST: Output Isolation

3.6.1 Purpose. This test measures the output isolation of a multicoupler, which is the isolation in dB between any two output ports with all other ports terminated in their characteristic impedance. Adequate isolation between sources can be critical to proper system operation.

3.6.2 Test Equipment. Signal generator, spectrum analyzer, and terminations (characteristic impedance).

3.6.3 Test Method.

3.6.3.1 Setup. Connect the test equipment as shown in Figure 3-11.

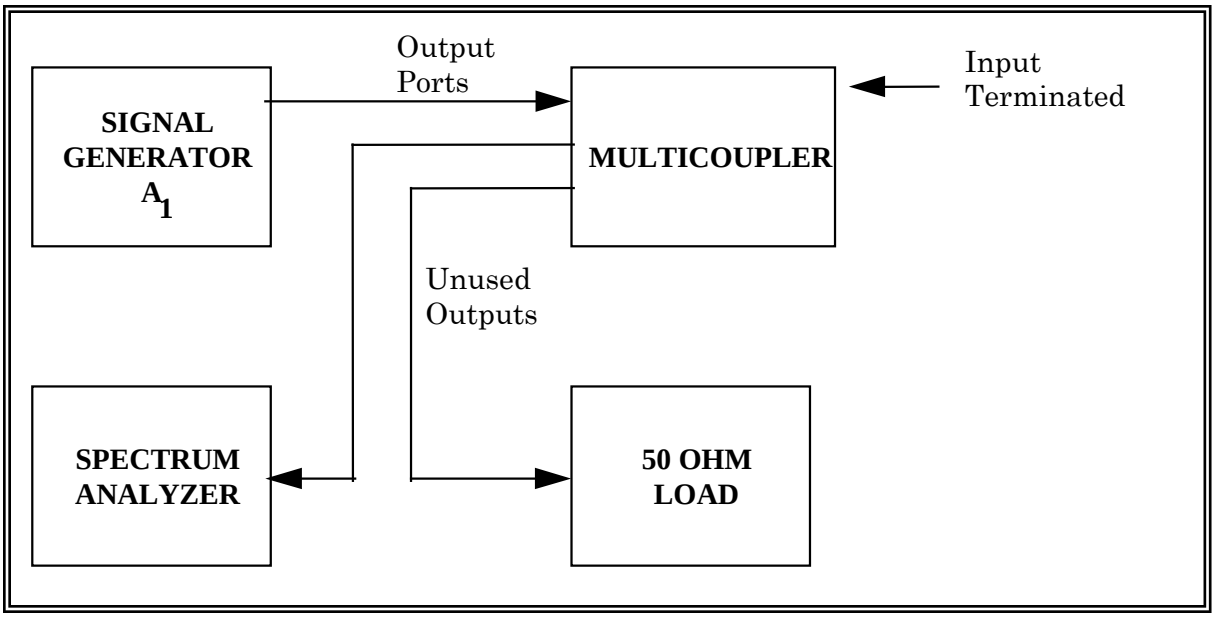

Figure 3-11. Output isolation (see test 3.6).

3.6.3.2 Conditions. Perform this test under laboratory conditions after a warm-up time of at least 30 minutes. Variations in supply voltage and operating temperature may be evaluated depending on intended application.

3.6.3.3 Procedure.

3.6.3.3.1 Remove the multicoupler under test from the test setup shown in Figure 3-11. Set the signal generator frequency to the center of the passband and set the generator attenuator A_1 to a value at least 70 dB below the maximum signal generator output. Set a convenient reference level on the spectrum analyzer.

3.6.3.3.2 Record in dB the attenuator reading A_1 on Data Sheet 3-6.

3.6.3.3.3 Connect the multicoupler between the signal generator and the spectrum analyzer illustrated in Figure 3-11 with the characteristic impedance of all unused ports terminated. Increase the signal generator attenuator A_1' to return the signal level on the analyzer to reference level and record the attenuator setting A_1' on Data Sheet 3-6.

3.6.3.3.4 Repeat subparagraph 3.6.3.3.3 for various frequencies in the multicoupler passband and for other pairs of output ports as required. Be aware of the amount of isolation used. It will not be possible to return the signal to the reference level if the unit has too much isolation.

3.6.3.4 Data Reduction. Calculate the output isolation ($A_1' - A_1$) and record on Data Sheet 3-6.

Data Sheet 3-6	**Telemetry Multicouplers**
Test 3.6	**Output isolation**
Amplifier Manufacturer:	**Model:**
Serial No.:	
Test Personnel:	**Date:**

Frequency (MHz)	**RF Input Power A_1** (dB)	**Atten. Setting A_1'** (dB)	**Port Pairs**	**Calculate $A_1' - A_1$**	**Isolation** (dB

CHAPTER 4

TEST PROCEDURES FOR TELEMETRY RECEIVERS

4.0 General

This chapter provides the user with a set of test procedures to determine the performance characteristics of a telemetry receiver. It may not be necessary to conduct all of the tests described in this chapter for any one receiver if the receiver will be used for a specific application. Some tests are appropriate for frequency division multiplexing while others are appropriate for time division multiplexing. For example, if a system is intended to handle a large number of modulated sub-carriers, the noise power ratio (NPR) test (notch noise test) is a very practical indicator of the suitability of the receiver. On the other hand, if the system will be handling pulse code modulation (PCM) formats, the bit error rate (BER) test is a good test. When performing the tests identified in this chapter, use the following standard test conditions unless otherwise specified:

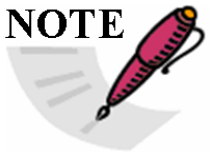	The tests in this section have been identified as Core or Non-Core tests. The Core tests are the ones that should always be conducted by Ranges on their telemetry receivers whenever possible. Non-Core tests are still important but may be deemed optional based on the specific needs of individual Ranges.

Minimum warm-up time:	30 minutes
Input signal frequency:	Mid-band
RF input level:	As stated in procedure
First local oscillator:	Desired operational mode
IF bandwidth:	Desired operational bandwidth
Demodulator type:	FM
AFC:	Off
AGC:	On, shortest time constant
Video bandwidth:	Maximum available
Video output:	1 V rms
Video amplifier:	Terminate in design load impedance

TABLE 4-1. TEST MATRIX FOR TELEMETRY RECEIVERS	
Test Number and Paragraph	**Test Description**
4.1	Spurious signal response test (**CORE)**
4.2	Noise figure **(CORE)**
4.3	Intermediate frequency signal-to-noise ratio (IF SNR) Linearity Test (**CORE)**
4.4	Automatic gain control (AGC) static test **(CORE)**
4.5	AGC dynamic test – Response to square wave **(NON-CORE)**
4.6	AGC dynamic test – Response to sine wave test **(NON-CORE)**
4.7	FM capture ratio **(NON-CORE)**
4.8	Noise power ratio (NPR) (**NON-CORE)**
4.9	Local oscillator (LO) radiation **(CORE)**
4.10	Local oscillator (LO) stability **(NON-CORE)**
4.11	Pulse code modulation bit error rate **(NON-CORE) See Section7.1 for updated BER testing.**
4.12	Frequency modulation step response **(NON-CORE)**
4.13	Receiver band pass frequency response using unmodulated signal **(CORE)**
4.14	Receiver band pass frequency response using phase modulated signal (**CORE)**
4.15	Receiver band pass frequency response using white noise input **(CORE)**
4.16	Data frequency response (**NONE-CORE)**
4.17	Automatic gain control stability **(NON-CORE)**
4.18	Receiver video spurious outputs **(NON-CORE)**
4.19	Predetection carrier output **(NON-CORE)**
4.20	FM receiver dc linearity and deviation sensitivity **(NON-CORE)**
4.21	Receiver phase noise **(CORE)**
4.22	Receiver adjacent channel interference **(CORE)**

4.1 TEST: Spurious Signal Response

4.1.1 Purpose. This test determines how a telemetry receiver reacts to the presence of a strong RF signal which is outside of the passband to which the receiver is tuned. This situation can occur frequently on a major test range or other location where multiple RF telemetry signals are being transmitted at the same time from multiple test vehicles at varying distances from the telemetry receive site.

4.1.2 Test Equipment. An RF frequency synthesizer or RF generator, microwave counter, step attenuator (0 to 60-dB minimum), 3-way power splitter, spectrum analyzers, and dc voltmeter.

4.1.3 Test Method. This test measures spurious response by applying a large out-of-passband signal to the receiver input. The resulting AGC voltage is compared with the AGC voltage produced when a smaller (typically –60 dB) signal is applied with a frequency equal to the receiver center frequency. The spectra at the receiver input and IF output are also monitored.

4.1.3.1 Setup. Connect the test equipment as shown in Figure 4-1.

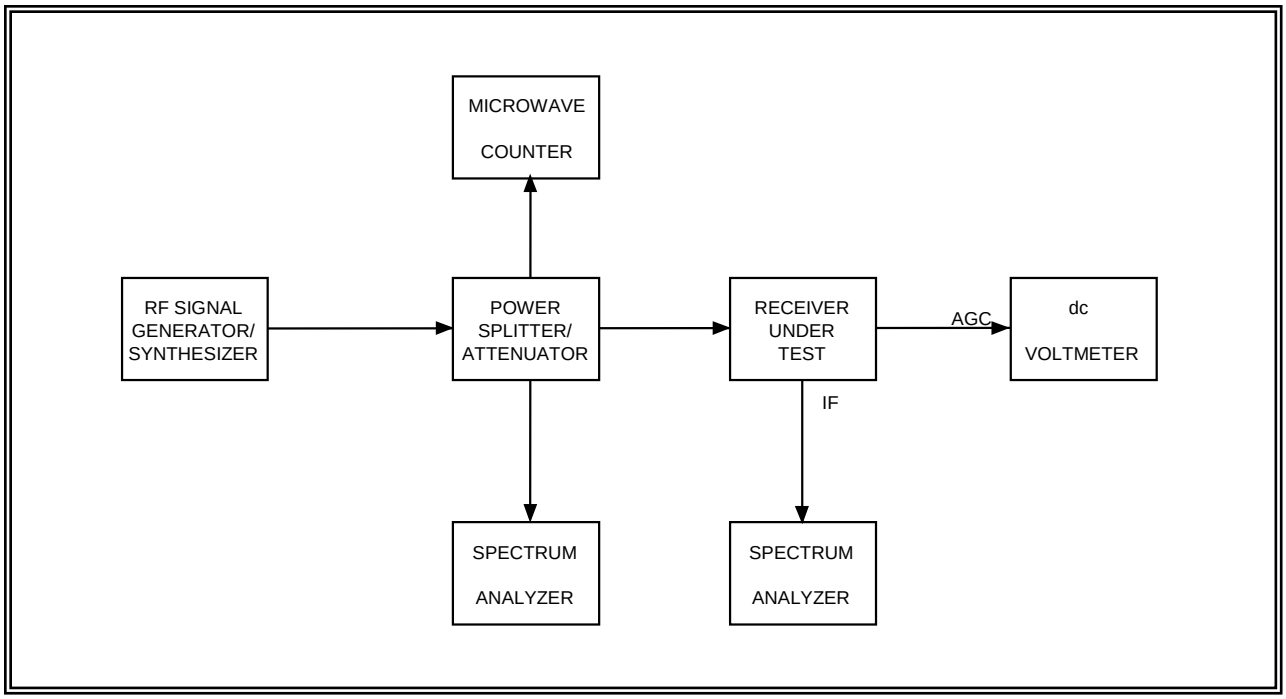

Figure 4-1. Receiver spurious signal response test (see tests 4.1 and 4.3).

4.1.3.2 Conditions. Use the standard test conditions described in paragraph 4.0. Set the RF generator to continuous wave mode. Any spurious signals at the RF generator output should be at least 10 dB below the specified value of receiver spurious rejection. The receiver local oscillators should be set to crystal mode, if possible. Set the receiver IF bandwidth to 1 MHz (or the closest value to 1 MHz). Set the frequency spans of the spectrum analyzers to approximately four times the receiver IF bandwidth and the resolution bandwidths to 10 kHz.

4.1.3.3 Procedure.

4.1.3.3.1 Set the receiver tuner to the center of its tuning range. Set the RF generator to the receiver center frequency with a signal level of –30 dBm. Set the step attenuator to the specified value of spurious rejection (60 dB is a typical value, 60-dB attenuation would result in a signal level of –90 dBm). Measure the receiver AGC voltage and record on Data Sheet 4-1.

4.1.3.3.2 Set the RF generator frequency to a value at least 10 MHz below the lowest tuner frequency. Decrease the step attenuation to 0 dB. Slowly increase the RF generator frequency while monitoring the dc voltmeter and spectrum analyzers. If the AGC voltage indicates a signal which is stronger than that measured in subparagraph 4.1.3.3.1, record the maximum AGC voltage and the RF generator frequency on Data Sheet 4-1 after verifying that the RF generator does not have a spurious component at the receiver center frequency. Continue increasing the RF generator frequency until it is at least 10 MHz higher than the highest tuner frequency. Monitor the IF SNR on the spectrum analyzer throughout this test. Note any degradation in IF SNR.

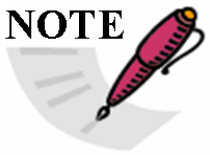	The AGC voltage should indicate a strong signal when the RF generator is at the receiver center frequency. Do not record values on the Data Sheet when the RF generator frequency is within the –60 dB band pass of the receiver.

4.1.3.3.3 Repeat subparagraphs 4.1.3.3.1 and 4.1.3.3.2 for other receiver center frequencies as desired.

4.1.3.3.4 Turn the RF generator off. Monitor the spectrum of the receiver IF output while tuning the receiver from its lowest frequency to its highest frequency. If any discrete signals appear on the spectrum display, record the tuner frequency and AGC voltage on Data Sheet 4-1. For this test, discrete signals are defined as signals that are more than 6 dB above the background noise level.

4.1.3.3.5 This test can be automated if the RF generator, spectrum analyzer, receiver, frequency counter, step attenuator, and dc voltmeter are under computer control. The RF generator step size should be equal to or less than the receiver IF bandwidth.

Data Sheet: 4-1	**Telemetry Receivers**
Test: 4.1	**Spurious signal response**
Receiver Manufacturer:	**Model:**
Serial No:	
Test personnel:	**Date:**

Center frequency: _____ (MHz) IF BW _____ (kHz)

Final LO mode: _____ XTAL _____ Variable Frequency Oscillator (VFO)

Location: _____

Receiver AGC voltage (60-dB attenuation): volts

RF generator frequency	AGC voltage

Receiver tuner frequency	Amplitude of discrete signal

*BW - bandwidth

4.2 TEST: Noise Figure

4.2.1 Purpose. This test measures the noise figure which is the ratio of the input signal to noise divided by the output signal to noise expressed in dB. See Appendix B for a discussion of noise Figure. The noise figure of a device is a measure of how much noise is added to the signal by that device. The lower the noise figure, the better the device.

4.2.2 Test Equipment. Noise source and noise figure meter.

4.2.3 Test Method.

4.2.3.1 Setup. Connect the test equipment as shown in the manual for the noise figure meter.

4.2.3.2 Conditions. Use the test conditions described in the manual for the noise figure meter. Use the standard test conditions described in paragraph 4.0 if not covered in the noise figure meter manual.

NOTE	If the AGC time constants will not permit measurement of noise Figure in the automatic mode, switch the receiver to manual gain control and adjust the gain as recommended by the manufacturer. If manual gain control is not available, test 4.2 should be eliminated. Also, make certain the gain of the receiver under test is linear.

4.2.3.3 Procedure.

4.2.3.3.1 Tune the receiver slowly across the entire range with the noise figure meter operating in the automatic mode and properly adjusted. Note the maximum and minimum readings as well as any abrupt changes in noise figure. After verifying the calibration of the instrument at these settings, record the noise figures and the corresponding readings of the tuning dial on Data Sheet 4-2 for the minimum and maximum values.

4.2.3.3.2 Conduct noise figure measurement in 10-MHz increments across the entire tuning range of the receiver.

4.2.3.4 Data Reduction. Plot measured data as shown in Figure 4-2.

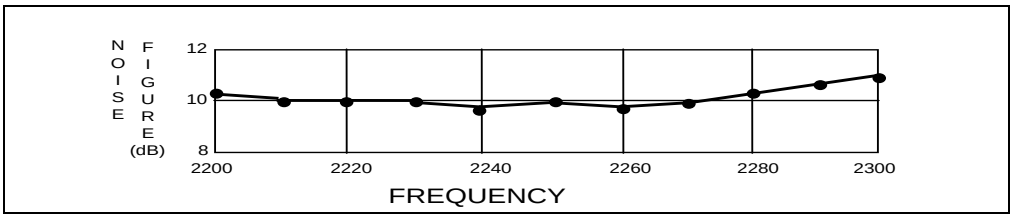

Figure 4-2. Noise figure plot (see test 4.2).

Data Sheet: 4-2	**Telemetry Receivers**
Test4.2	**Noise Figure**
Manufacturer:	**Model:**
Serial No:	
Test personnel:	**Date:**

Receiver Tuning (MHz)	**Noise Figure** (dB)
Freq =	Max NF =
Freq =	Min NF =

Note: Take additional readings where data slope changes abruptly.

4.3 TEST: Intermediate Frequency Signal-to-Noise Ratio (IF SNR) Linearity Test

4.3.1 Purpose. This test determines the linearity of the receiver linear IF output. This test will determine how well the linear IF SNR tracks the RF input signal power. It is important for proper operation with diversity combiners or other devices that depend on the linearity of the receiver IF for correct operation.

NOTE 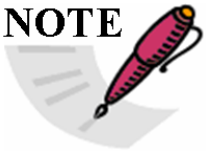	Many receivers have a limited IF output as well. Be sure not to use this output for this test.

4.3.2 Test Equipment. Signal generator and true rms voltmeter.

4.3.3 Test Method.

4.3.3.1 Setup. Connect the test equipment as shown in Figure 4-1.

4.3.3.2 Conditions. Use the standard test conditions described in paragraph 4.0.

4.3.3.3 Procedure.

4.3.3.3.1 Use the true rms voltmeter to measure the linear output of the final IF with –10-dBm RF input power applied to the receiver input (unmodulated) and the AGC on. The IF output should be loaded with the impedance recommended by the manufacturer. This measurement of signal plus noise is identified as V_1.

4.3.3.3.2 Set the receiver controls for manual gain control. Adjust the manual gain control to produce a linear final IF output having the same amplitude (V_1) as that measured with –10 dBm applied to the input with the AGC on.

4.3.3.3.3 Remove the RF signal from the receiver input and terminate the input at 50 ohms. Again measure the linear output of the second IF with the true rms voltmeter. This measurement of noise voltage is identified as V_2.

4.3.3.3.4 Record the measured data on Data Sheet 4-3.

4.3.3.3.5 Repeat subparagraphs 4.3.3.3.1 through 4.3.3.3.4 in 10-dB increments from –10 to –120 dBm.

4.3.3.4 Data Reduction

4.3.3.4.1 Calculate the voltage *SNR* out of the final IF from the following expression:

$$SNR = \sqrt{(V_1/V_2)^2 - 1} \qquad \text{(Eq. 4-1)}$$

This is a numerical ratio and may be changed to dB as follows:

$$SNR\ (\text{dB}) = 20 \log \text{SNR} \qquad \text{(Eq. 4-2)}$$

4.3.3.4.2 Calculate SNR for each of the RF input power levels shown on Data Sheet 4-3.

Data Sheet 4-3	**Telemetry Receivers**
Test 4.3	**IF SNR**
Manufacturer:	**Model:**
Serial No:	
Test personnel:	**Date:**

RF Input Power (dBm)	**Second IF Output** (Measured Values)		**SNR** (Calculated Values)	
	Signal + Noise V_1 (mV rms)	Noise V_2 (mV rms)	SNR	SNR (dB)
–10				
–20				
–30				
–40				
–50				
–60				
–70				
–80				
–90				
–100				
–110				
–120				
NO SIGNAL				

Note: Take additional readings where data slope changes abruptly.

4.4 TEST: AGC Static

4.4.1 Purpose. This test determines the AGC output characteristic as a function of the RF input level to the receiver and determines its effectiveness in controlling the linear IF signal amplitude.

4.4.2 Test Equipment. Signal generator, power meter, digital voltmeter, and true rms voltmeter.

4.4.3 Test Method.

4.4.3.1 Setup. Connect the test equipment as shown in Figure 4-3.

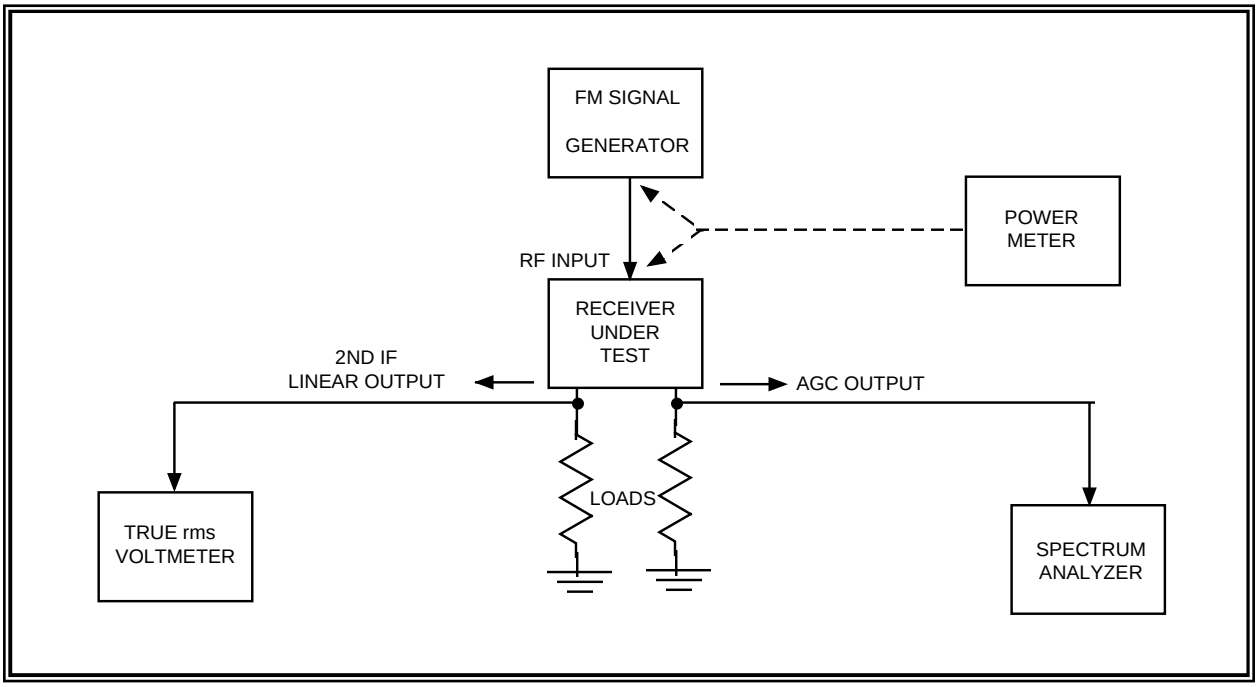

Figure 4-3. AGC static test (see test 4-4).

4.4.3.2 Conditions. Use the standard test conditions described in paragraph 4.0 except as follows:

Input amplitude: as stated in the test procedure
AGC: ON, maximum time constant

4.4.3.3 Procedure.

4.4.3.3.1 Use the power meter to measure the insertion loss of the cable that connects the FM signal generator to the receiver under test. Use this measured insertion loss to compensate the RF power setting of the FM signal generator in the following steps.

4.4.3.3.2 Adjust the FM signal generator output for a receiver mid-band frequency and a -10-dBm input to the receiver.

4.4.3.3.3 Tune the receiver for proper reception of the input signal (0 on tuning meter).

4.4.3.3.4 Measure and record the AGC output level with the digital voltmeter.

4.4.3.3.5 Measure and record the IF output amplitude with the true rms voltmeter.

4.4.3.3.6 Record measured data on Data Sheet 4-4.

4.4.3.3.7 Measure and record the AGC voltages and the IF output amplitude in 10-dB increments from –10 to –120 dBm.

4.4.3.4 Data Reduction. Plot the AGC and the IF characteristics as illustrated in Figure 4-4.

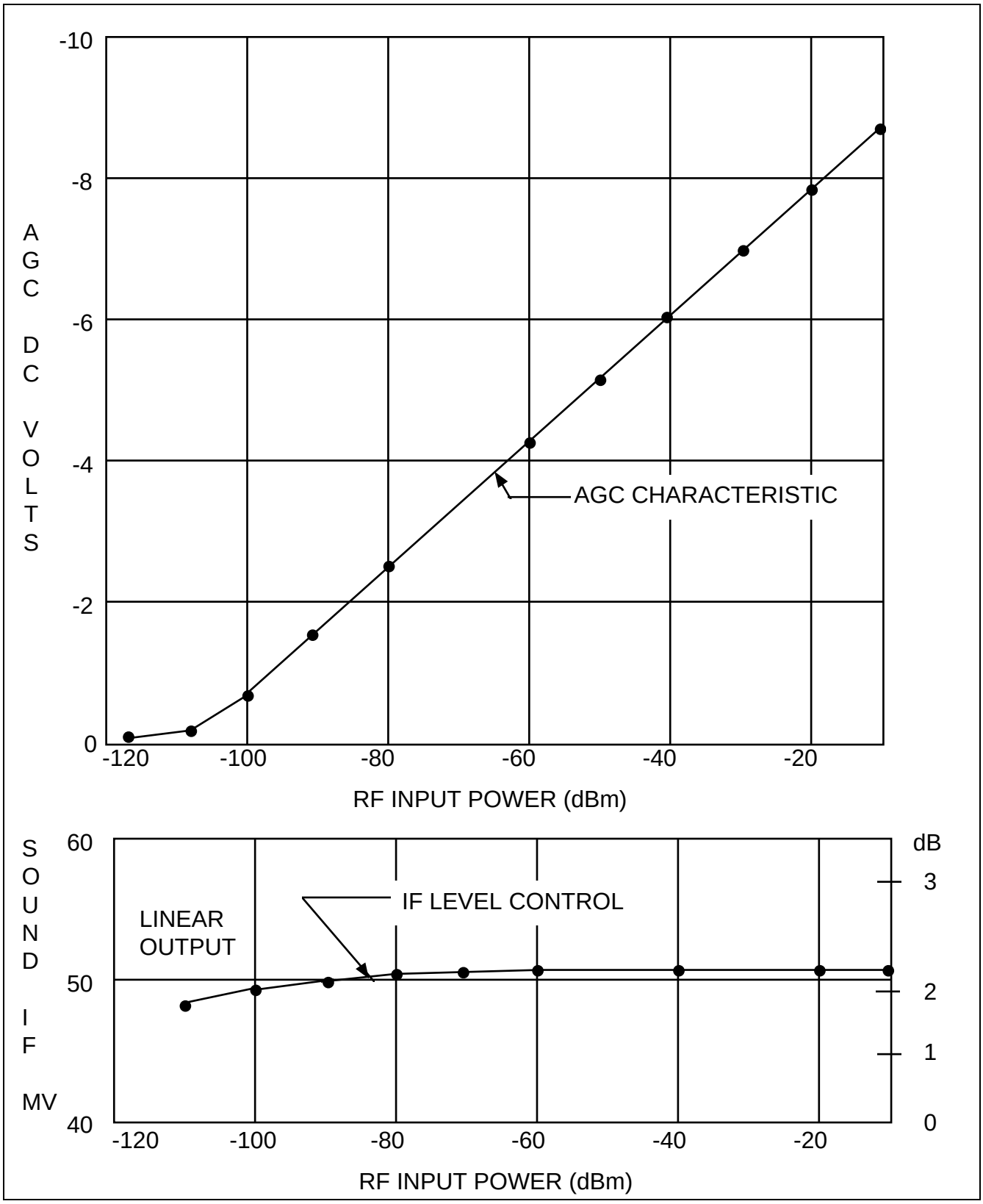

Figure 4-4. AGC characteristics and IF level control (see test 4-4).

Data Sheet 4-4	**Telemetry Receivers**
Test 4.4	**AGC static**
Manufacturer:	**Model:**
Serial No:	
Test Personnel:	**Date:**
Cable loss (FM signal generator to receiver)	dB

Receiver RF Input Power (dBm)	**AGC Output Level** (Vdc)	**IF Output Amplitude** (mV rms)
–10		
–20		
–30		
–40		
–50		
–60		
–70		
–80		
–90		
–100		
–110		
–120		
NO SIGNAL		

Note: Take additional readings where data slope changes abruptly.

4.5 TEST: AGC Dynamic Test - Response to Square Wave

4.5.1 Purpose. This test determines the AGC attack and recovery time with square wave amplitude modulation. In addition, it shows the effects of abrupt changes in the RF power level on AGC voltages, IF signals and video output.

4.5.2 Test Equipment. Function generator, signal generator with AM modulation capability or a separate PIN modulator, power meter, oscilloscope and camera, digital voltmeter, and true rms voltmeter.

4.5.3 Test Method.

4.5.3.1 Setup. Connect the test equipment as shown in Figure 4-5 and set the oscilloscope channel 1 and 2 input selector switches to dc.

4.5.3.2 Conditions. Use the standard test conditions described in paragraph 4.0 except as follows:

RF input power: as stated in the test procedure
AGC: as stated in the test procedure
Modulation frequency: variable

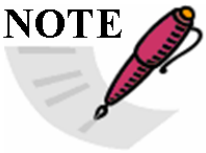	One set of measurements is conducted with only AM applied to the carrier. An oscilloscope presentation is examined to determine both attack and recovery times of the AGC circuit. Another set of measurements is conducted with both AM and FM applied to the carrier. The oscilloscope displays are photographed to show AGC response, limited and linear IF signal response, and the video output signal.

4.5.3.3 Procedure.

4.5.3.3.1 Use the RF power meter, with no bias applied in the PIN modulator as illustrated in Figure 4-5, to measure the insertion loss of cables and the PIN modulator connected between the receiver input and the FM signal generator.

4.5.3.3.2 Tune the receiver for proper reception of the input signal and adjust the receiver AGC time constant to the minimum setting.

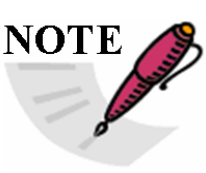	Compensate for this insertion loss when applying RF power to the receiver input in subsequent measurements.

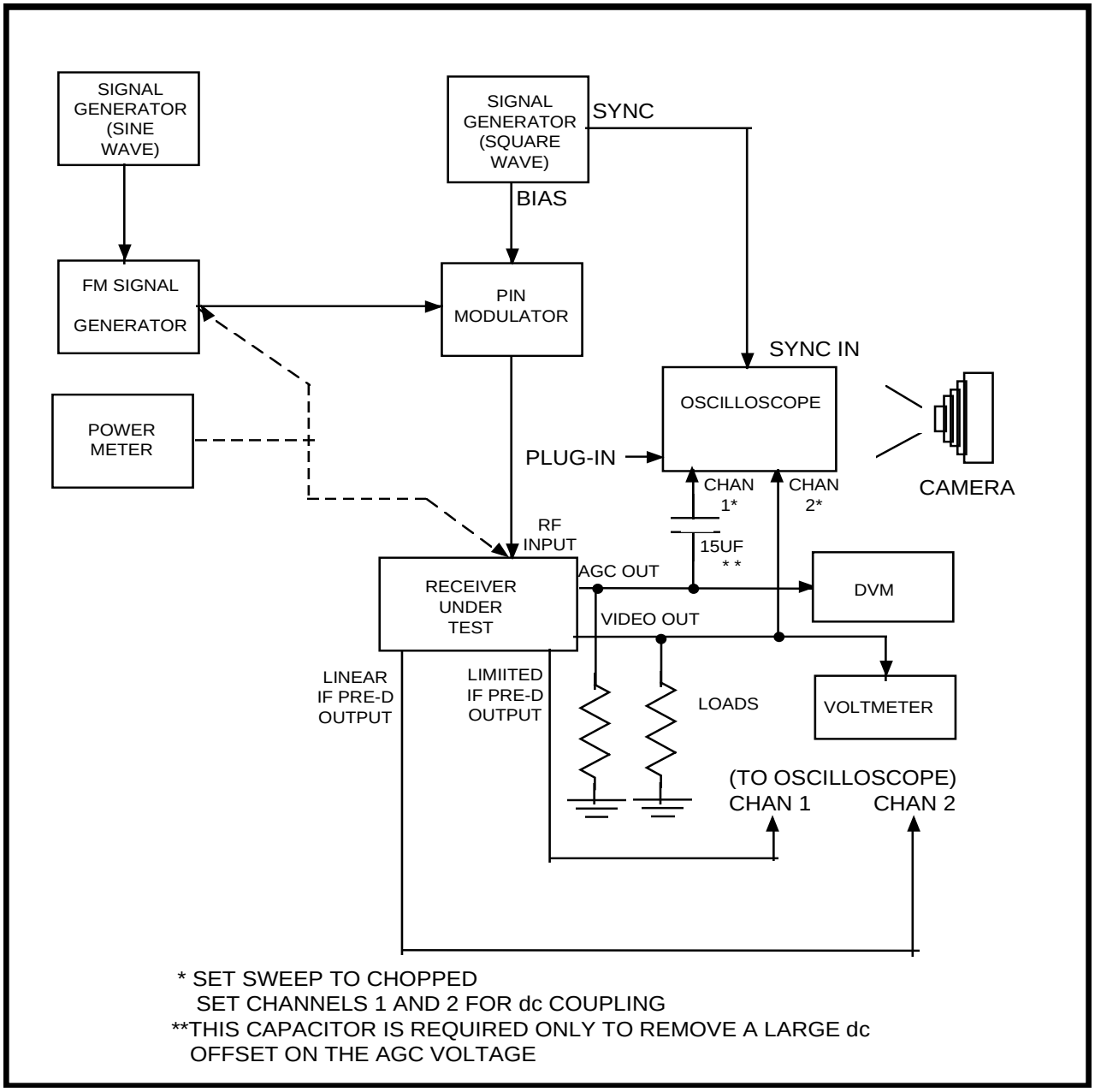

Figure 4-5. AGC response to square wave amplitude modulation (see test 4.5).

4.5.3.3.3 Reconnect the bias signal (square wave) to the PIN modulator to apply amplitude modulation to the receiver input signal.

4.5.3.3.4 Use the calibration of the AGC output voltage versus the RF input voltage previously measured and tabulated on Data Sheet 4-5 in the Static AGC test when adjusting the desired amplitude of modulation.

4.5.3.3.5 Set the mean level of the receiver input signal by adjusting the RF output of the signal generator.

4.5.3.3.6 Select those settings of the PIN modulator bias and the signal generator output which cause the receiver input to vary between the power levels of –57 and –97 dBm. Temporarily adjust the frequency of the square wave bias signal to approximately 0.1 Hz. This frequency allows sufficient time to read the resulting AGC output voltage with the digital voltmeter and make appropriate adjustments.

4.5.3.3.7 Adjust the frequency of the bias signal to show the maximum excursion of the AGC characteristic with a level portion equal to approximately one-quarter of the cycle period.

4.5.3.3.8 Adjust the sweep speed of the oscilloscope for a calibrated setting which will give the maximum sweep speed but show one full cycle of the AGC characteristic.

4.5.3.3.9 Display the resulting AGC characteristic on the oscilloscope so that the trace is centered and the vertical deflection on the oscilloscope is 5 cm (1.96 in).

4.5.3.3.10 Select the polarity of the vertical amplifier so that the part of the AGC trace corresponding to the lower RF level is at the bottom of the display.

4.5.3.3.11 Inspect the oscilloscope trace to determine the attack time and recovery time. The attack time is the time required for the AGC voltage to change from 10 to 90 percent of the full range indicated on the oscilloscope as the input RF power level changes from -97 to -57 dBm. The recovery time is the time required for the 10 to 90 percent change of the AGC voltage when the input changes from -57 to -97 dBm. Record these values on Data Sheet 4-5.

4.5.3.3.12 Adjust the modulation input to the FM signal generator to produce a 200-kHz peak deviation of the RF signal input to the receiver with the AM still applied to the carrier.

4.5.3.3.13 Ensure that the modulation frequency is approximately eight times the frequency of the bias signal applied to the PIN modulator.

4.5.3.3.14 Set the receiver AGC time constant to minimum.

4.5.3.3.15 Adjust the video gain of the receiver to produce 1 V rms output and connect the video signal channel 2 input of the oscilloscope.

4.5.3.3.16 Superimpose the video signal on the AGC trace and position the video signal in the top half of the display as illustrated on Data Sheet 4-5.

4.5.3.3.17 Ensure that the vertical deflection of the video signal is 2 cm (0.79 in).

4.5.3.3.18 Adjust the FM frequency to produce a stationary oscilloscope presentation.

4.5.3.3.19 Photograph the oscilloscope display of the AGC and video output characteristics.

NOTE	The preceding measurement procedures may be repeated for other settings of the receiver AGC time constant as required.

4.5.3.3.20 Disconnect the AGC and the video output from the oscilloscope and connect the linear and limited outputs of the second IF to the oscilloscope (see Figure 4-5).

4.5.3.3.21 Position the limited IF trace at the bottom of the display and adjust the vertical amplifier gain to produce a 1 cm (0.39 in) deflection.

4.5.3.3.22 Position the linear IF trace in the center of the display and adjust the vertical amplifier gain to produce a 1 cm (0.39 in) deflection for the quiescent state.

4.5.3.3.23 Photograph the IF output signals.

4.5.3.3.24 Take additional photographs of the AGC, the video output, and the IF output signals corresponding to RF input power level changes of -77 to -97 dBm, -37 to -97 dBm, -37 to -57 dBm, and -37 to -77 dBm.

4.5.3.4 Data Reduction

4.5.3.4.1 Attach photographs to Data Sheet 4-5 as illustrated.

4.5.3.4.2 Inspection of the photographs will yield several items of qualitative information relative to AGC characteristics. The AGC attack and recovery times are determined and compared, degradation intervals of the receiver video output resulting from the imperfect response of the AGC circuit and demodulator are observed, and the dynamic response of both the limited and linear IF signals to AGC action are shown.

Data Sheet: 4-5	**Telemetry Receivers**
Test 4.5	**AGC dynamic test - Response to square wave**
Manufacturer:	**Model:**
Serial No:	
Test Personnel:	**Date:**

Receiver AGC Setting	Measured AGC AttackTime (ms)	Measured AGC Recovery Time (ms)

AGC Attack and Recovery, Video and IF Characteristics

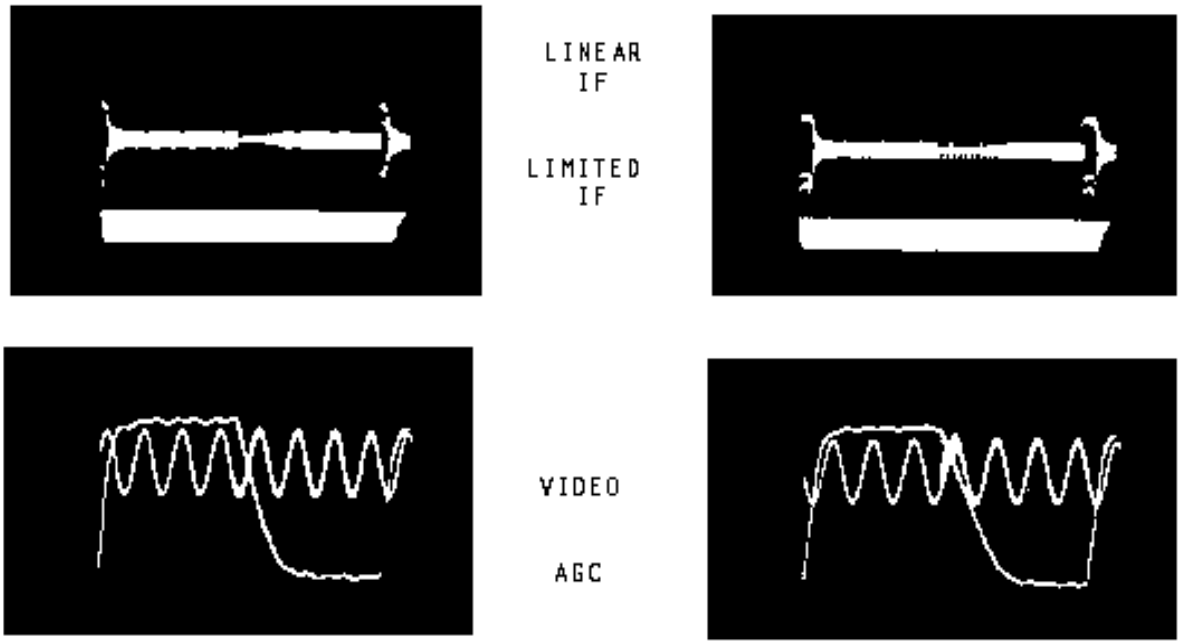

RF Input: –57 dBm to –97 dBm

Sweep Speed ____ millisec/div

RF Input: –37 dBm to –97 dBm

Sweep Speed ____ millisec/div

Data Sheet: 4-5 **(continued)** **Telemetry Receivers**

Test: 4.5 AGC dynamic test - Response to square wave

Manufacturer: Model: Serial No:

Test personnel: Date:

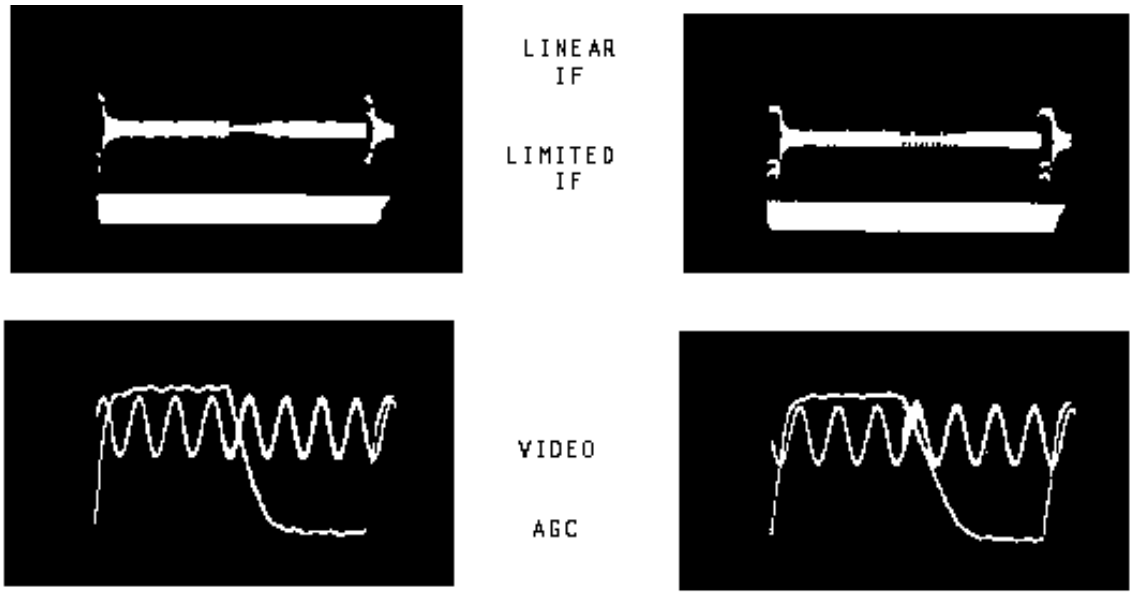

RF Input: -77 dBm to -97 dBm

Sweep Speed ___ millisec/div

RF Input: -37 dBm to -57 dBm

Sweep Speed ___ millisec/div

4.6 TEST: AGC Dynamic Test - Response to Sine Wave

4.6.1 Purpose. This test determines the AGC attack and recovery time with a sine wave. It also shows the effects of changes in RF power level on AGC voltages, IF signals and video output.

4.6.2 Test Equipment. Power supply, audio signal generator, RF signal generator, PIN modulator, counter, oscilloscope, true rms voltmeter, and digital voltmeter.

4.6.3 Test Method.

4.6.3.1 Setup. Connect the test equipment as shown in Figure 4-6 and set the oscilloscope channel 1 and 2 input selector switches to dc.

4.6.3.2 Conditions. Use the test conditions described in subparagraph 4.5.3.2.

4.6.3.3 Procedure.

4.6.3.3.1 Set the output level of the RF signal generator to –15 dBm.

4.6.3.3.2 Adjust the dc bias on the PIN modulator to produce a –45 dBm input to the receiver with no output from the audio signal generator as indicated by the AGC output voltage calibration plot obtained in the static AGC test.

4.6.3.3.3 Set the receiver AGC to the shortest time constant.

4.6.3.3.4 Set the frequency of the audio signal generator to a frequency determined by the formula f = 10/TC, where f is in hertz and TC (time constant) is in milliseconds. The result is the attack time corresponding to an input RF power level change from –77 to –37 dBm.

4.6.3.3.5 Determine from the plot of the static AGC test data the AGC voltage difference corresponding to an RF input change between –26 and –20 dBm.

4.6.3.3.6 Adjust the output voltage of the audio signal generator to produce an AGC signal the magnitude of this difference.

NOTE 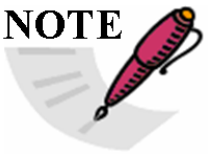	At modulating frequencies below 10 Hz, the AGC signal should be measured with a direct-coupled oscilloscope. At modulating frequencies above 10 Hz, the AGC signal may be measured with a true rms voltmeter. To convert the static AGC voltage change obtained from the plot to rms, multiply by 0.35.

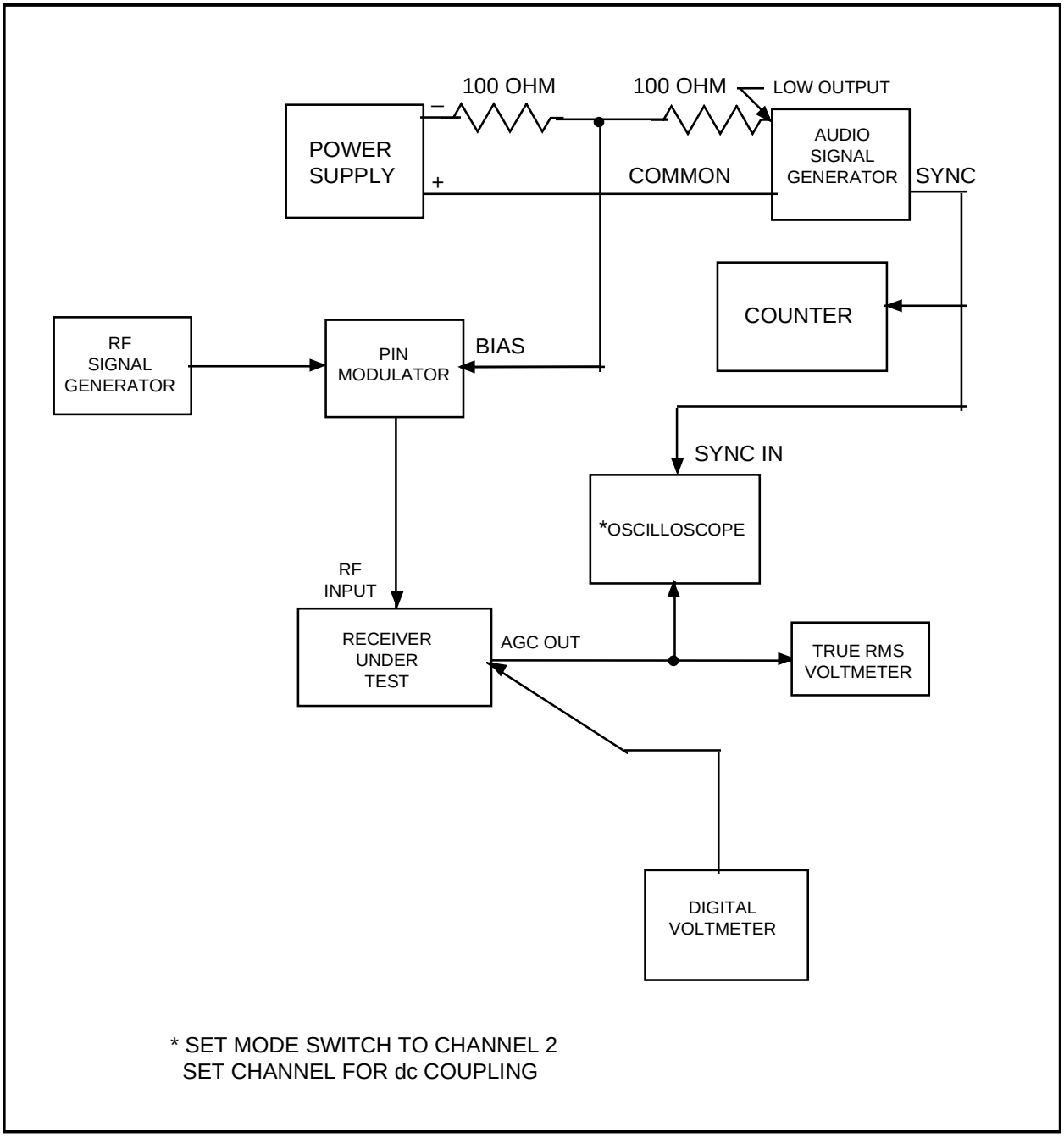

Figure 4-6. AGC response to sine wave AM (see test 4.6).

4.6.3.3.7 Increase the frequency of the audio signal generator and measure the frequencies at which the AGC output voltage excursion decreases by 3, 6, 9, and 12 dB (f_3, f_6, f_9, and f_{12} represent the frequencies at the -3, -6, -9, and -12 dB points).

4.6.3.3.8 Record these frequency readings on Data Sheet 4-6.

4.6.3.3.9 Repeat procedure for other time constant settings of receivers as required.

4.6.3.3.10 Repeat the previous measurements of an AGC voltage difference corresponding to an RF input change between -70 and -64 dBm.

Data Sheet: 4-6	**Telemetry Receivers**
Test 4.6	**AGC dynamic test - Response to sine wave**

Manufacturer:	**Model:**
Serial No:	
Test Personnel:	**Date:**

-20 dBm to –26 dBm

Receiver AGC Setting	f_0	f_3	f_6	f_9	f_{12}
Milliseconds	Hertz	Hertz	Hertz	Hertz	Hertz
0.1*					
1.0*					
10 *					

–64 dBm to –70 dBm

Receiver AGC Setting	f_0	f_3	f_6	f_9	f_{12}
Milliseconds	Hertz	Hertz	Hertz	Hertz	Hertz
0.1*					
1.0*					
10 *					

*These settings may vary with receiver models.

4.7 TEST: FM Capture Ratio

4.7.1 Purpose. This test determines the FM capture ratio of the receiver. The capture ratio relates to the ability of the receiver to capture the stronger of two co-channel frequency modulated signals applied to the receiver input terminals. This applies to limiter discriminator for Tier 0 systems only.

4.7.2 Test Equipment. Counter, two FM signal generators, power meter, wave analyzer, two 10-dB attenuator pads, 20-dB attenuator pad, and power adder.

4.7.3 Test Method

4.7.3.1 Setup. Connect the test equipment as shown in Figure 4-7.

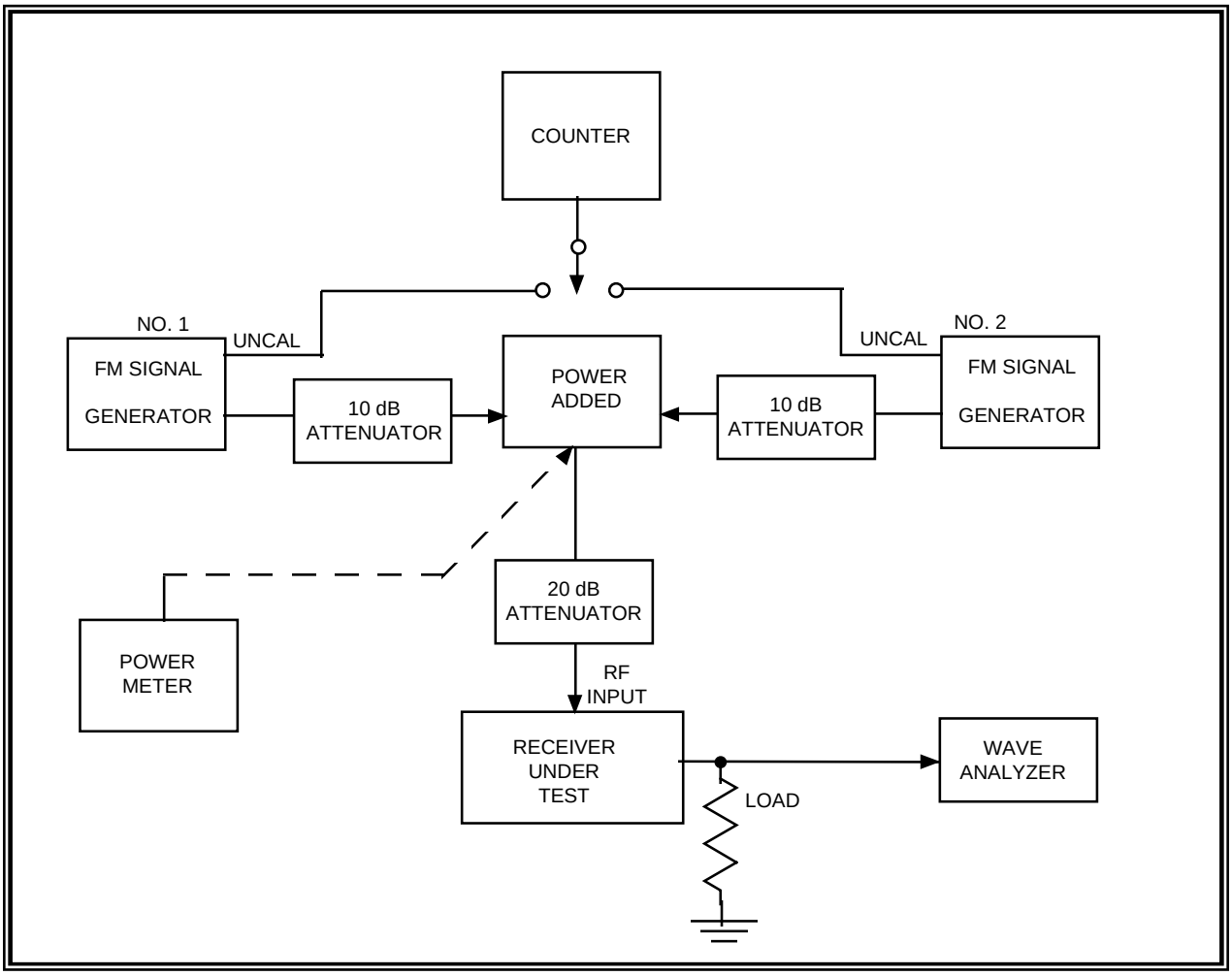

Figure 4-7. Capture ratio test (see test 4.7).

4.7.3.2 Conditions. Use the standard test conditions described in paragraph 4.0, except as follows.

Input amplitude:	variable
AGC:	10 ms
Video bandwidth:	100 kHz
Carrier deviation no. 1:	200 kHz peak
Modulation frequency:	IRIG Channel 13 (14.5 kHz)
Carrier deviation no. 2:	200 kHz peak
Modulation frequency:	IRIG Channel 16 (40 kHz)

4.7.3.3 Procedure.

4.7.3.3.1 Adjust the frequency of the number 2 signal generator for receiver mid-band and the output level for minimum output.

4.7.3.3.2 Adjust the frequency of the number 1 signal generator to within 5 kHz of generator number 2 and the output level to -25 dBm as indicated by the power meter.

4.7.3.3.3 Record the attenuation reading that is on the signal generator dial. This is reference level P_1.

4.7.3.3.4 Frequency modulate the number 1 signal generator with a 14.5-kHz sine wave.

4.7.3.3.5 Adjust the deviation for a 200-kHz peak as indicated on the deviation meter.

4.7.3.3.6 Adjust the output level of the number 1 signal generator for minimum output and increase output level of signal generator number 2 to -25 dBm as indicated by the power meter.

4.7.3.3.7 Frequency modulate the number 2 signal generator with a 40-kHz sine wave and adjust the deviation for a 200-kHz peak as indicated on the deviation meter.

4.7.3.3.8 Disconnect the power adder from the power meter and connect it to the receiver input through a 20-dB attenuator.

4.7.3.3.9 Tune the receiver for proper reception of the input signal (0 on tuning meter).

NOTE 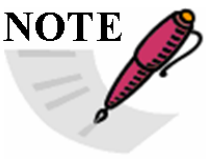	For all subsequent measurements, maintain the frequencies of the signal generators within 5 kHz of each other.

4.7.3.3.10 Tune the wave analyzer to the 40-kHz signal and adjust the receiver video output of 1 V rms.

4.7.3.3.11 Tune the wave analyzer to the 14.5-kHz modulation signal and increase the output of signal generator number 1 until the analyzer reads 0.1 V rms (-20 dBV).

4.7.3.3.12 Record data on Data Sheet 4-7.

4.7.3.4 Data Reduction. Calculate the capture ratio as indicated on Data Sheet 4-7.

Data Sheet: 4-7	**Telemetry Receivers**
Test 4.7	**FM capture ratio**
Manufacturer:	**Model:**
Serial No:	
Test Personnel:	**Date:**

Signal generator No. 1

P_1 _____ dBm

P_2 _____ dBm

Capture ratio = $P_1 - P_2$ = _____ dB

4.8 TEST: Noise Power Ratio (NPR)

4.8.1 Purpose. This test measures the NPR and the noise power ratio floor (NPRF) and determines the intermodulation noise (NPRI). This test only applies to FM/FM and systems using SCOs.

NOTE 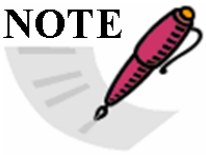	The NPR is defined as the ratio of noise in a test channel when all channels are loaded with white noise to noise in the test channel when all channels except the test channel are fully noise loaded. The NPRF is defined as the ratio of noise in a test channel when all channels are loaded with white noise to noise in the test channel when noise loading is completely removed from the base band. The NPRI is defined as the ratio of noise in a test channel when all channels are loaded with white noise to noise in the test channel caused by intermodulation power. The NPRI can be calculated one of two ways: a. NPRI = NPR + Δ, where Δ is obtained from a graph that relates Δ to the quantity (NPRF – NPR). b. NPRI = NPR • NPRF / (NPRF – NPR) where all quantities are power ratios.

4.8.2 Test Equipment. Noise source, true rms voltmeter, audio signal generator, spectrum analyzer, noise receiver, and FM signal generator.

4.8.3 Test Method. A white noise signal (with or without notch filter) of known amplitude is applied to the receiver under test. The output level is measured with a noise receiver and the noise ratio is calculated.

4.8.3.1 Setup. Connect the test equipment as shown in Figure 4-8.

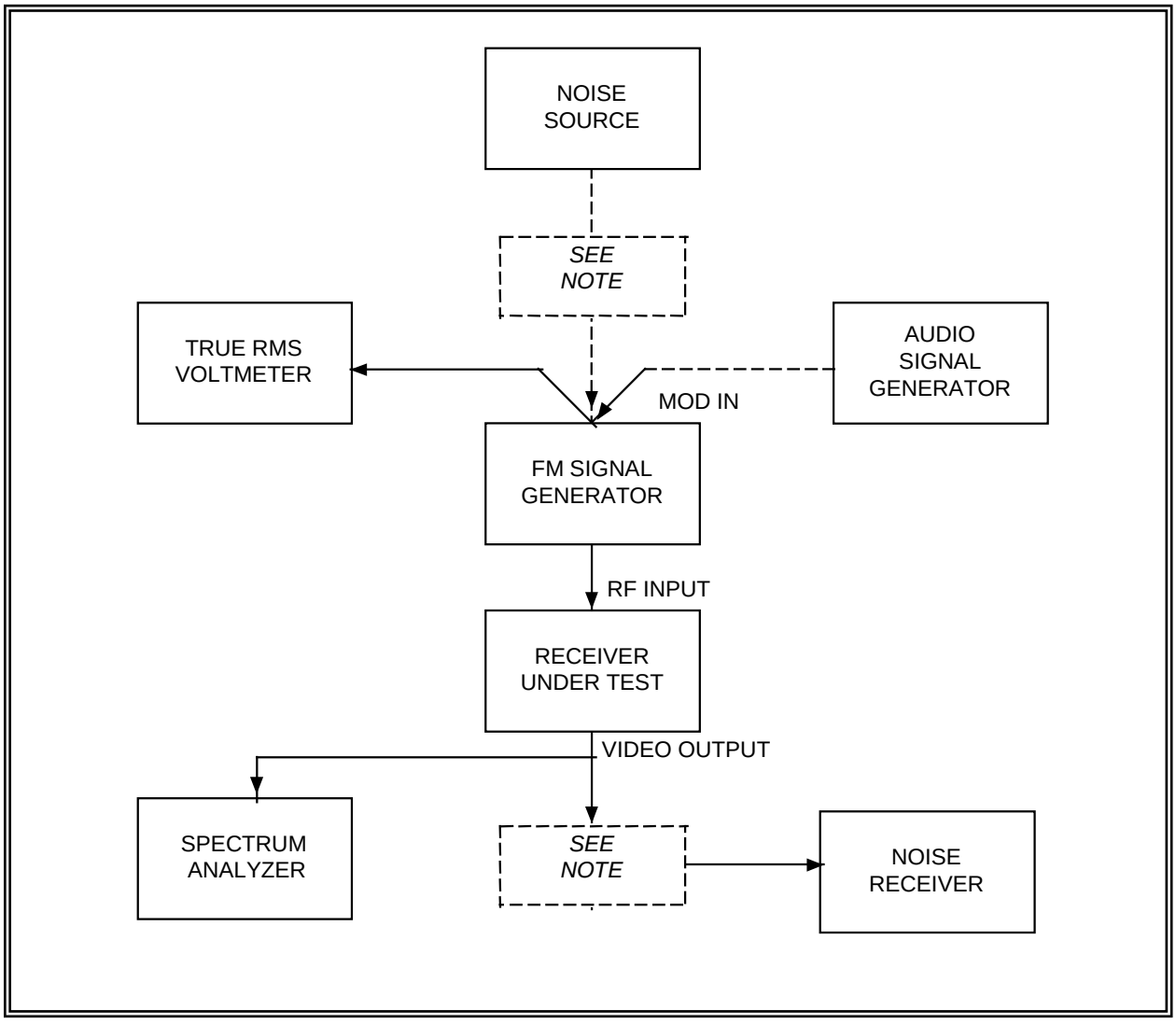

Figure 4-8. NPR standard test setup (see test 4.8).

NOTE	Matching networks may be required at the output of the noise generator and at the input of the noise receiver if the connecting impedance differs greatly from 75 ohms. Short lengths (6 feet or less) of 50- or 93-ohm cable will not significantly affect measurement accuracy.

4.8.3.2 Conditions. Use the standard test conditions described in paragraph 4.0 except as follows:

TABLE 4-2
EXCEPTIONS TO STANDARD TEST CONDITIONS

IF Bandwidth (kHz)	**Modulation Freq. NPR Base Band** (kHz)	**Video Bandwidth** (dc to kHz)	**Deviation** (kHz rms)
300	12–108	150–200	25
500	12–108	150–200	55
	12–156	175–300	50
	12–204	225–400	40
750	12–108	150–200	95
	12–156	175–300	85
	12–204	225–400	80
1000	12–204	225–400	125
1500	12–204	225–400	210
3300	12–204	225–400	530

RF input - variable (see Data Sheet 4-8)
Demodulator bandwidth - wide (1.5 MHz)

4.8.3.3 Procedure.

4.8.3.3.1 Record the measured data on Data Sheet 4-8.

4.8.3.3.2 Disconnect the noise generator and matching network from the FM signal generator.

4.8.3.3.3 Adjust the receiver RF input to obtain a 40-dB IF SNR by using IF SNR data obtained from the IF SNR test (see paragraph 4.3). If 40 dB is not obtain-able, use maximum.

4.8.3.3.4 Tune the receiver for proper reception of the input signal.

4.8.3.3.5 Use the audio signal generator to calibrate the deviation sensitivity of the FM signal generator. Set the frequency of the audio signal generator to 10 kHz and the output amplitude to 0.5 V as indicated by the true rms voltmeter.

4.8.3.3.6 Adjust the modulation level control on the FM signal generator to 140-kHz deviation as indicated by the deviation meter if the desired rms deviation is 100 kHz or less. If the desired rms deviation is more than 100 kHz, adjust the modulation level control for 710-kHz deviation as indicated by the deviation meter. These two settings represent 200-kHz rms deviation per V rms and 1000-kHz rms deviation per V rms respectively.

4.8.3.3.7 Replace the audio signal generator with the noise source at the modulation input of the FM signal generator.

4.8.3.3.8 Select the high-pass and low-pass filters for the noise source in accordance with the conditions listed in subparagraph 4.8.3.2 to provide the appropriate base band noise for the IF bandwidth under test. To obtain the desired rms deviation, adjust the output noise voltage (V_1) as indicated by the voltmeter for the levels listed on Data Sheet 4-8 under V_1. (These values apply only when using the equipment shown in the typical block diagram, Figure 4-8.)

NOTE 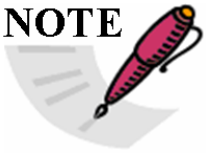	Guard against video amplifier overloading by: 1) observing the noise at the receiver video output with an oscilloscope to determine that noise spikes are not limited in amplitude, and 2) observing the video output of the receiver with the spectrum analyzer to be sure that the receiver does not exhibit spurious responses outside of the noise band pass or in the notches used in the test procedure.

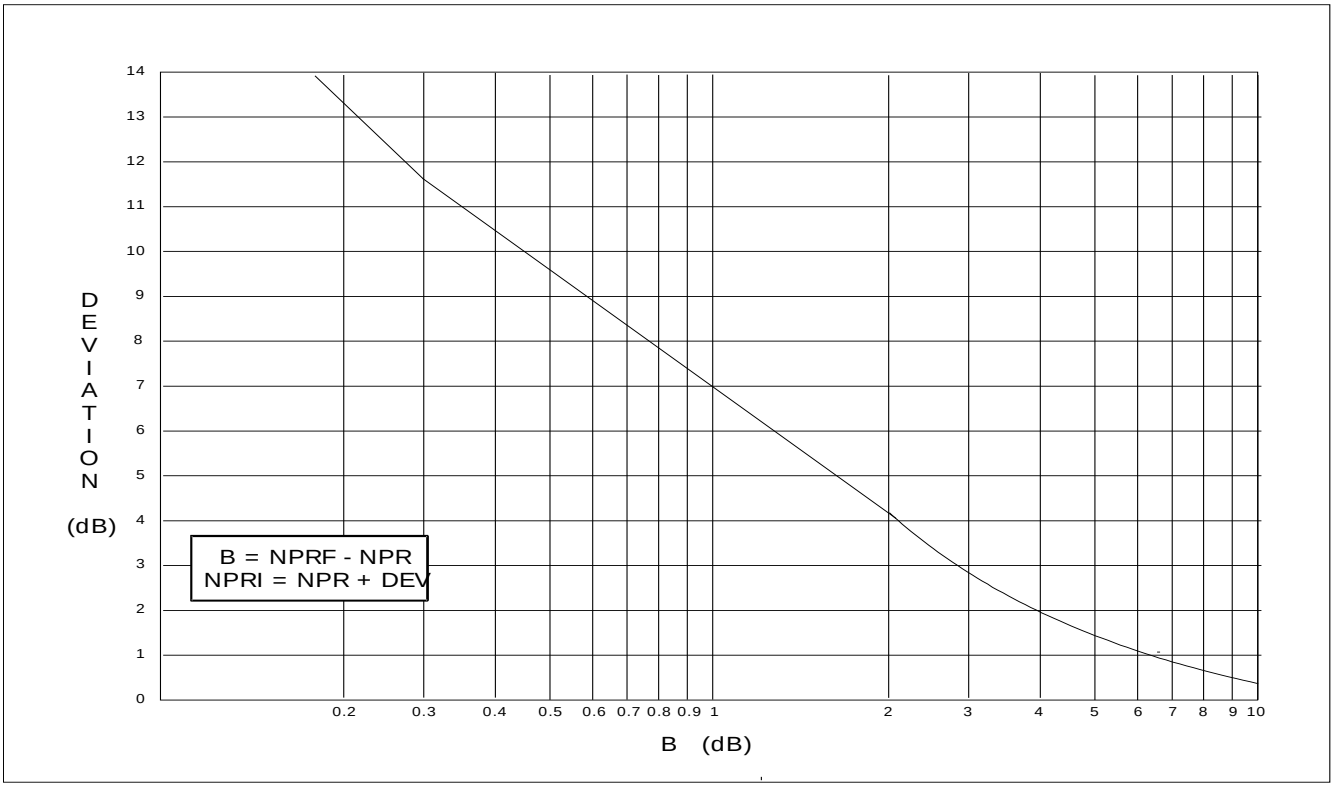

Figure 4-9. Curve for converting NPR and NPRF data to NPRI (see test 4.8).

4.8.3.3.9 Determine the NPR for the channels shown on Data Sheet 4-8. Adjust the video output level to linear region.

4.8.3.3.10 Remove the base band noise modulation source and terminate the modulation input.

4.8.3.3.11 Use the same noise receiver reference level to again obtain NPR values for the channels shown on Data Sheet 4-8 and record these values under NPRF.

4.8.3.3.12 Adjust the value of V_1 required to set the remaining rms deviation levels shown on the Data Sheet and measure the corresponding NPR and NPRF for the channels shown on Data Sheet 4-8.

4.8.3.3.13 Using the relationship B = NPRF – NPR, determine the value for Δ from Figure 4-9. Calculate the value for NPRI using the equation NPRI = NPR + Δ.

4.8.3.3.14 Repeat the previous measurements for other levels of IF SNR as desired. It must be pointed out, however, that the receiver may become noise floor limited at the lower IF SNR levels (that is, NPR = NPRF). In such cases the calculation of NPRI is not possible. The measured data may be plotted as illustrated in Figure 4-10.

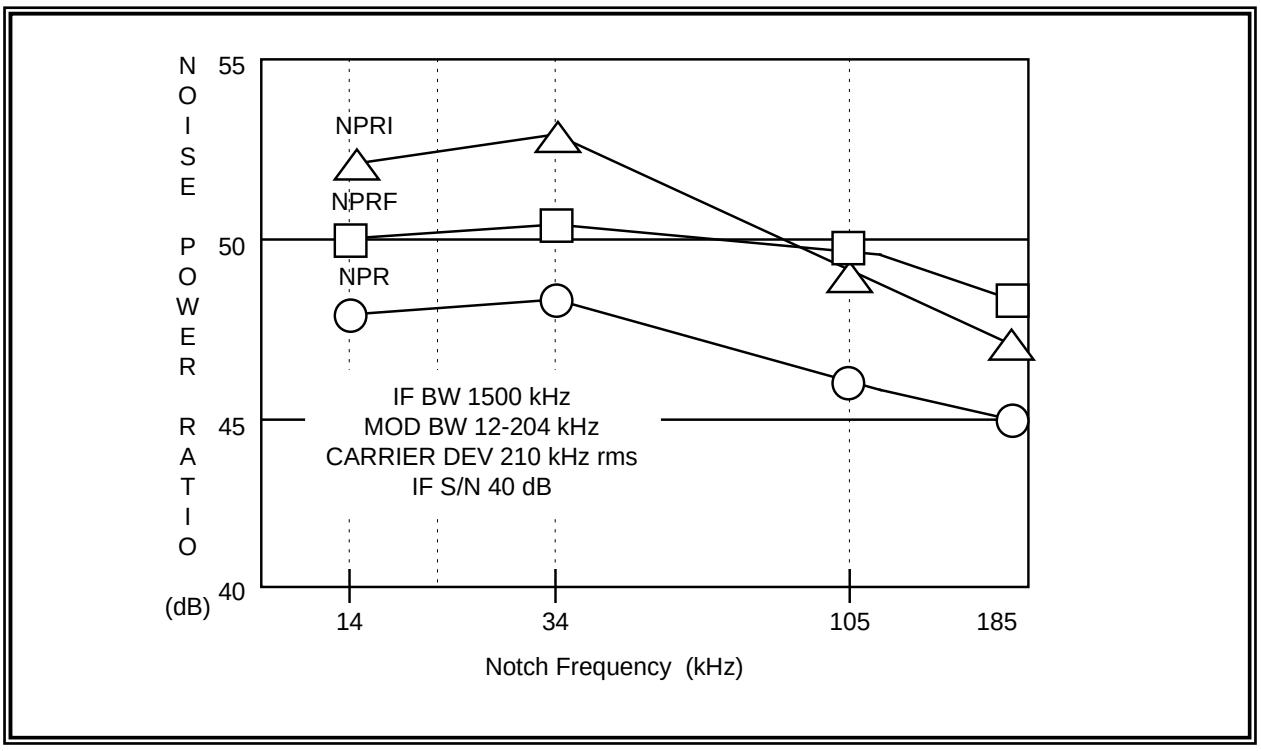

Figure 4-10. Noise power ratio (see test 4.8).

Data Sheet: 4-8	**Telemetry Receivers**
Test 4.8	**Noise power ratio**

Manufacturer:	**Model:**
Serial No:	
Test Personnel:	**Date:**

IF SNR = 40 dB (or max __ dB)

IF Band-width (kHz)	**Mod Freq. Band (kHz)**	**Deviation (kHz rms)**	**V_1 (V rms)**	**NPR/NPRF (dB)**				**NPRI (dB)**			
				Notch Freq. (kHz)				Notch Freq. (kHz)			
				14	34	70	105	14	34	70	105
300	12-108	25	0.125								
500	12-108	55	0.275								
750	12-108	95	0.475								
				14	34	70	152	14	34	70	152
500	12-156	50	0.250								
750	12-156	85	0.425								
				14	34	105	185	14	34	105	185
500	12-204	40	0.200								
750	12-204	80	0.400								
1000	12-204	125	0.125								
1500	12-204	210	0.210								
3300	12-204	530	0.530								

4.9 TEST: Local Oscillator (LO) Radiation

4.9.1 Purpose. This test determines if any emissions are appearing at the RF input terminals because of radiation from LO.

4.9.2 Test Equipment. FM signal generator, spectrum analyzer, and power meter.

4.9.3 Test Method. A spectrum analyzer is used to scan across the receiver band to detect any emission radiation.

4.9.3.1 Setup. Connect the test equipment as shown in Figure 4-11.

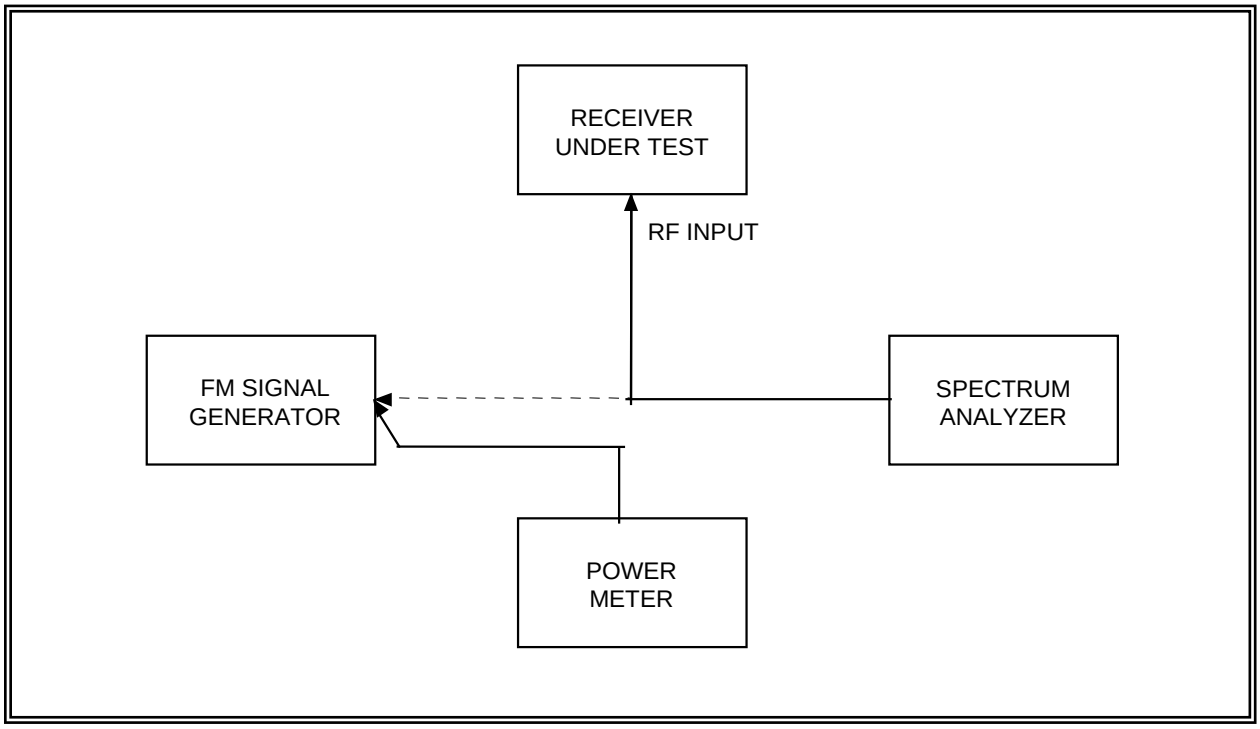

Figure 4-11. Local oscillator radiation test (see test 4.9).

4.9.3.2 Conditions. Use the standard test conditions described in paragraph 4.0. Use double shielded cable (RF 214/or equivalent) between the spectrum analyzer and the receiver RF input.

NOTE	This test should be performed for all available modes of operation such as variable frequency oscillator (VFO), crystal, and synthesizer.

4.9.3.3 Procedure.

4.9.3.3.1 Tune the receiver to the desired frequency.

4.9.3.3.2 Connect the power meter to the FM signal generator output and adjust the generator frequency to correspond to the receiver tuning. Adjust the output level to –25 dBm. This signal will be used to calibrate the spectrum analyzer.

4.9.3.3.3 Disconnect the power meter and connect the FM signal generator to the spectrum analyzer. Adjust the analyzer so that the –25-dBm input signal to the connecting cable appears as 0 dB on the display unit. Calibration of the spectrum analyzer should be checked at each observed frequency.

4.9.3.3.4 Remove the cable from the FM generator and connect the receiver RF input to the spectrum analyzer. Tune the spectrum analyzer slowly across the frequency range from 10 MHz to 10 GHz and record the frequency and amplitude of all signals observed.

4.9.3.3.5 Record measured data on Data Sheet 4-9.

Data Sheet: 4-9	**Telemetry Receivers**
Test 4.9	**Local oscillator (LO) radiation**
Manufacturer:	**Model:**
Serial No:	
Test Personnel:	**Date:**

Mode (both first and second local oscillator) _____

Frequency (MHz)	**Indicated Amplitude** (dBm)	**Calibration Correction**	**Amplitude Corrected** (dBm)
		↑ –25 dBm ↓	

Mode (both first and second local oscillator) _____

Frequency (MHz)	**Indicated Amplitude** (dBm)	**Calibration Correction**	**Amplitude Corrected** (dBm)
		↑ –25 dBm ↓	

4.10 TEST: Local Oscillator (LO) Stability

4.10.1 Purpose. This test determines the frequency stability of all LOs as a function of time.

4.10.2 Test Equipment. Electronic counter.

4.10.3 Test Method

4.10.3.1 Setup. Connect the test equipment as shown in Figure 4-12.

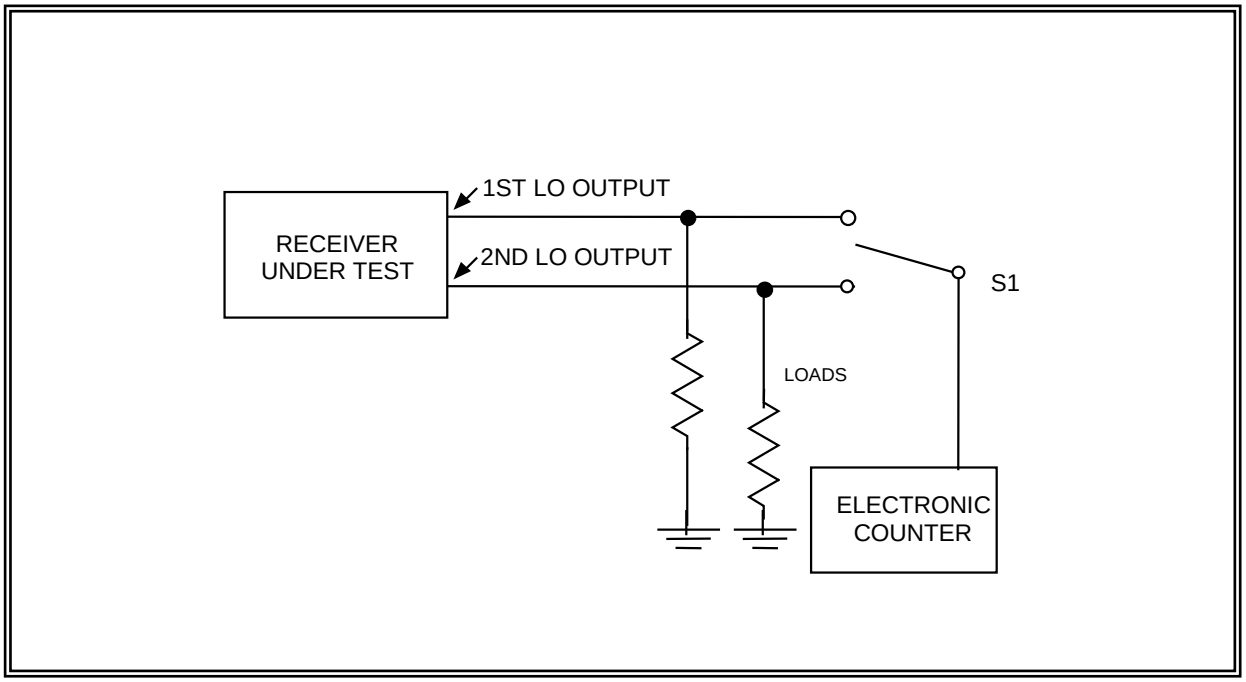

Figure 4-12. Local oscillator stability test (see test 4.10).

4.10.3.2 Conditions. Use the standard test conditions described in paragraph 4.0 except as follows:

Warm-up time:	none for receiver standard conditions for test equipment
RF input power:	none required
Receiver frequency:	near mid-band
First LO mode:	as stated in procedure
Second LO mode:	as stated in procedure

Disregard all other conditions.

4.10.3.3 Procedure.

4.10.3.3.1 Switch the first and second LOs to the crystal or synthesizer mode.

4.10.3.3.2 Turn on the receiver and tune to the desired frequency (preferably mid-band).

4.10.3.3.3 Turn on the receiver (cold start).

4.10.3.3.4 Measure and record the first and second LO frequencies with switch S1 set to the appropriate position at the time intervals shown on Data Sheet 4-10 (crystal mode).

4.10.3.3.5 Switch the first and second LOs to the VFO mode.

4.10.3.3.6 Tune the receiver to mid-band.

4.10.3.3.7 Turn off the receiver and allow 30 minutes to cool down. Turn on the receiver (cold start).

4.10.3.3.8 Measure and record the first and second LO frequencies with switch S1 set to the appropriate position at the time intervals shown on Data Sheet 4-10 (VFO mode).

4.10.3.4 Data Reduction

4.10.3.4.1 Use the frequency obtained at the reference time to calculate the frequency change in percent for crystal and VFO modes.

4.10.3.4.2 Use the frequency measured at the reference time (t_r = 30 minutes) to calculate the normal frequency (f_n) as follows including the sign

$$f_n = f - f_r \qquad \text{(Eq. 4-3)}$$

The frequency change in percent for each measurement, including the direction of change as

$$\%\ change = \frac{f - f_r}{f_r} \bullet 100 \qquad \text{(Eq. 4-4)}$$

indicated by sign, is calculated as follows:

Where:

f = frequency measured at a particular time

f_r = frequency measured at the reference time

4.10.3.4.3 Repeat calculations for VFO mode.

Data Sheet: 4-10 (crystal mode)	**Telemetry Receivers**
Test 4.10	**Local oscillator (LO) stability (crystal mode)**

Manufacturer:	**Model:**
Serial No:	
Test Personnel:	**Date:**

Receiver tuned frequency _____ MHz

Time (t) (min)	**First Local Oscillator Frequency**			**Second Local Oscillator Frequency**		
	Measured (MHz)	**Normalized (f_n, Hz)**	**Change %**	**Measured (MHz)**	**Normalized (f_n, Hz)**	**Change %**
5						
10						
15						
20						
25						
30 t_r						
45						
60						
90						
120						
180						
240						
300						
360						
420						
480						
540						
600						
660						
720						

Data Sheet: 4-10 (VFO mode)	**Telemetry Receivers**
Test 4.10	**Local oscillator (LO) stability test (VFO mode)**

Manufacturer:	**Model:**
Serial No:	
Test Personnel:	**Date:**

Receiver tuned frequency _____ MHz

Time (t) (min)	**First Local Oscillator Frequency**			**Second Local Oscillator Frequency**		
	Measured (MHz)	**Normalized (f_n, Hz)**	**Change %**	**Measured (MHz)**	**Normalized (f_n, Hz)**	**Change %**
5						
10						
15						
20						
25						
30 t_r						
45						
60						
90						
120						
180						
240						
300						
360						
420						
480						
540						
600						
660						
720						

4.11 TEST: Pulse Code Modulation Bit Error Rate

4.11.1 Purpose. This test measures the PCM bit error rate as a function of the receiver IF SNR.

4.11.2 Test Equipment. RF signal generator with FM or phase modulation (PM) or both capabilities as needed, microwave counter, microwave spectrum analyzer, power splitter, PCM bit synchronizer and detector, PCM bit error rate test set, oscilloscope, true rms meter, and step attenuator (1 dB steps, 100 dB attenuation minimum).

4.11.3 Test Method. This test assumes that a self-synchronizing bit error rate test set is available. The test can be performed with other test equipment with minor modifications to the procedure. This method is suitable for manual or computer controlled testing.

4.11.3.1 Setup. Connect the test equipment as shown in Figure 4-13.

4.11.3.2 Conditions. Use the standard test conditions described in paragraph 4.0. A low pass filter can be inserted between the bit error test set and the RF signal generator if desired.

4.11.3.3 Procedure.

4.11.3.3.1 Set the peak deviation of the RF signal generator to the value shown in Table 4-1 for the PCM code and receiver demodulator type to be used in this test (F_B = bit rate). The deviation may be set using the Bessel null method or any other method preferred by the personnel conducting the test.

TABLE 4-3. PCM PEAK DEVIATION FOR VARIOUS PCM CODES AND DEMODULATOR TYPES

PCM Code	Demodulator Type	Peak Deviation
NRZ	FM	0.35 F_B
Biø	FM	0.65 F_B
Biø	PM	60 to 70°
NRZ-M,S	PSK	90° or ±1
Biø-M,S	PSK	90° or ±1

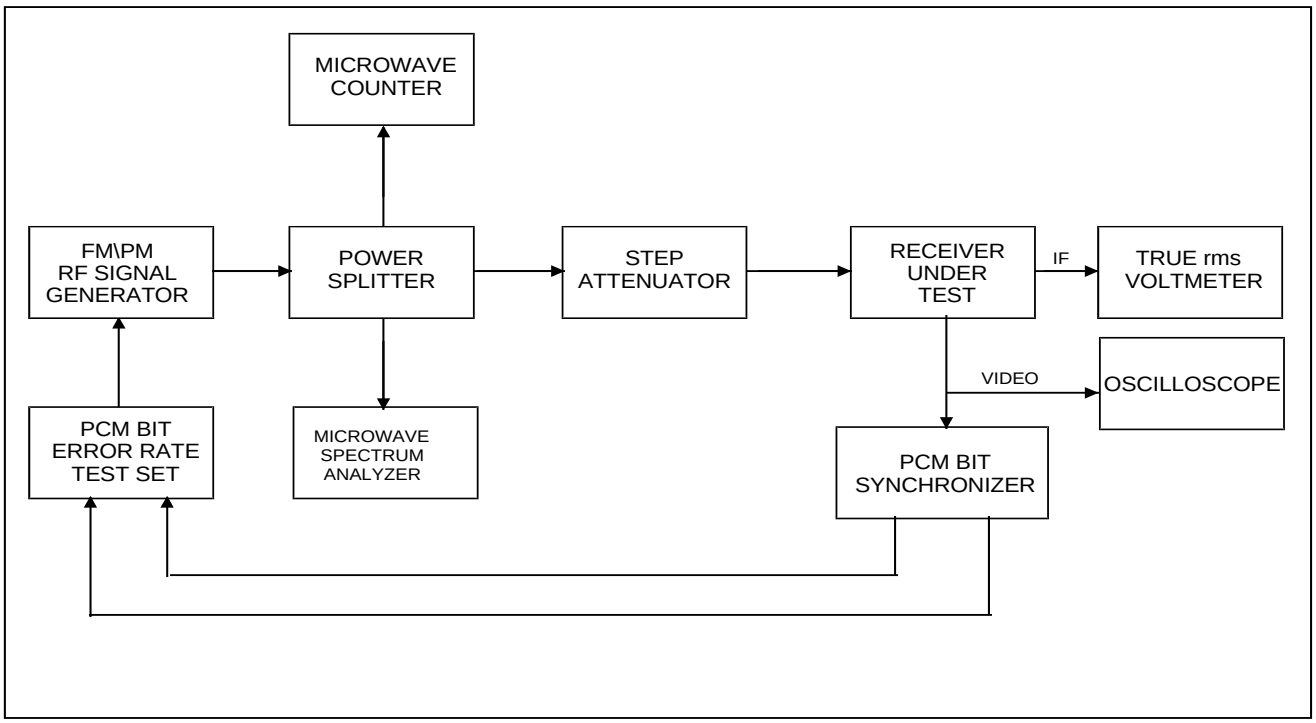

Figure 4-13. Receiver PCM bit error rate (see test 4.11).

4.11.3.3.2 Vary the attenuator setting until the bit error rate is approximately 10^{-5}. Decrease the attenuator (increase signal at receiver input) by 1 dB. Record this attenuator setting on Data Sheet 4-11. This setting will be the starting attenuator setting for this test.

4.11.3.3.3 Increase the RF signal applied to the telemetry receiver by 10 dB. Put the RF signal generator in the continuous wave mode. Measure the amplitude of the linear IF signal using the rms voltmeter and record on Data Sheet 4-11 as the linear IF amplitude in the AGC mode. Place the receiver in manual gain control mode (MGC) and adjust the gain to give the same IF amplitude recorded above (within ±10 percent of the value). The receiver may have an AGC freeze or hold mode which does the adjustment for you. Record this value on Data Sheet 4-11 as the IF amplitude in MGC mode. Increase the RF signal level by 6 dB. Measure the IF amplitude using the rms voltmeter and record on Data Sheet 4-11 as the +6 dB MGC amplitude. This value should be between 1.8 and 2.2 times as large as the previous MGC value. If it is not, decrease the manual gain and repeat the linearity check.

4.11.3.3.4 Return the attenuator to the starting value (see subparagraph 4.11.3.3.2). Set the manual gain to give the nominal linear IF output ±10 percent as determined in subparagraph 4.11.3.3.3 for the AGC mode. Measure and record this value on Data Sheet 4-11 as the starting value S + N. Set the attenuator to maximum attenuation. Measure the IF amplitude using the true rms voltmeter and record on Data Sheet 4-11 as the starting value N. Return the receiver to the AGC mode.

4.11.3.3.5 Set the RF signal generator to the modulation mode with the proper peak deviation. Set the attenuator and RF signal generator power to the values established in subparagraph 4.11.3.3.2 (starting value). Measure the bit errors per million bits and record on Data Sheet 4-11. An interval other than 1 million bits may be selected at the discretion of the test personnel.

4.11.3.3.6 Increase the attenuation by 1 dB. Measure the bit error rate and record on Data Sheet 4-11. Repeat for 1 dB attenuator steps up to 10 dB.

4.11.3.4 Data Reduction. The receiver IF SNR (in dB) at the starting value can be calculated from (S + N and N assumed to be rms voltages).

$$(S/N)_{IF} = 10 \log_{10} (((S + N)^2 - N^2) / N^2) \qquad \text{(Eq. 4-5)}$$

The IF SNR referenced to a bandwidth equal to the bit rate can be calculated using

$$(S/N)_{Fb} = (S/N)_{IF} + 10 \log_{10} (ENPBW/F_B) \qquad \text{(Eq. 4-6)}$$

Where:

ENPBW = equivalent noise power bandwidth of the receiver IF filter

F_B = PCM bit rate

The receiver IF bandwidth can be used as an approximation to the ENPBW when the ENPBW is not known. Increasing the attenuation by X-dB results in an X-dB decrease in IF SNR. The measured values of bit error rate versus IF SNR in a bandwidth equal to the bit rate can be compared to the results presented in section 3 of RCC Document 119, Telemetry Applications Handbook.

Data Sheet: 4-11	**Telemetry Receivers**
Test 4.11	**Pulse code modulation bit error rate**

Manufacturer: **Model:**

Serial No:

Test Personnel: **Center frequency:** _____ **MHz**

IF BW: _____ **kHz** **Video BW:** _____ **kHz**

Final LO mode: _____ XTAL: _____ VFO: _____ AFC/APC

Test personnel: _____ Date: _____ Location: _____

PCM code: _____ Bit rate: _____ kb/s Peak deviation: _____

Modulation type: ☐ FM ☐ PM ☐ PSK ☐ Other ( )

Attenuator setting for 10^{-5} BER: _____ dB

Linear IF amplitude in AGC mode: _____ mV rms

IF amplitude in MGC mode: _____ mV rms

IF amplitude in MGC mode (+6 dB): _____ mV rms

Starting value S + N: _____ mV rms

Starting value N: _____ mV rams

Starting value IF SNR: _____ dB

Attenuator setting	IF SNR (dB)	Bit error rate

4.12 TEST: Frequency Modulation Step Response

4.12.1 Purpose. This test measures the step response of the receiver to an input signal which is frequency modulated by pulses, for example, pulse amplitude modulation (PAM) or pulse code modulation (PCM).

4.12.2 Test Equipment. An RF signal generator which can be frequency modulated, square wave generator, microwave counter, oscilloscope, and power splitter.

4.12.3 Test Method. This test measures the frequency modulation step response of the receiver by applying an RF input signal which has been frequency modulated by a square wave.

4.12.3.1 Setup. Connect the test equipment as shown in Figure 4-14.

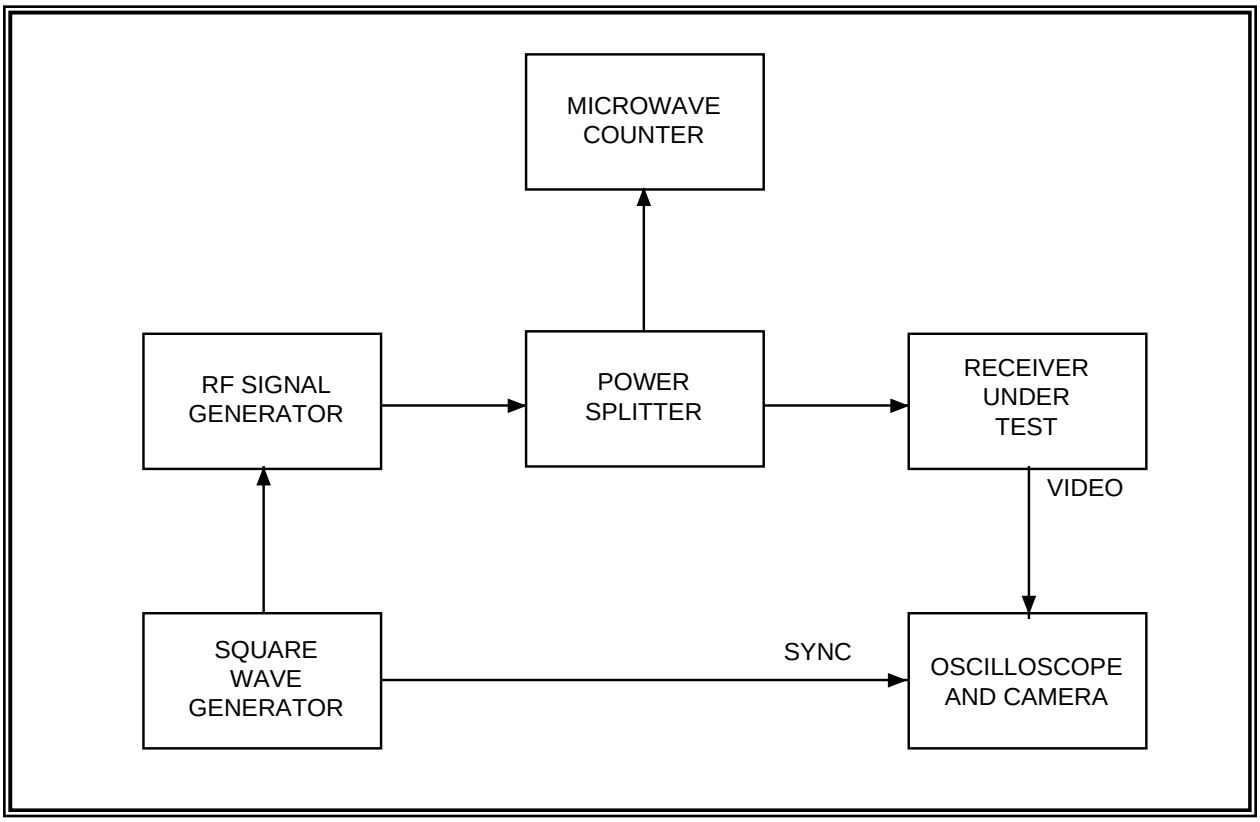

Figure 4-14. Receiver frequency modulation step response (see test 4.12).

4.12.3.2 Conditions. The RF signal generator output frequency should be set to the receiver's center frequency. Set the output power level to -50 dBm. The step response characteristics of the square wave generator and the RF signal generator frequency modulator must be 5 to 10 times better than the expected measured value, or the test results will not accurately reflect the receiver's FM step response.

4.12.3.3 Procedure. Frequency modulate the signal generator with a square wave. The square wave frequency should be equal to 0.1 times the receiver video bandwidth. (Video bandwidth should be less than or equal to one-half of the IF bandwidth.) The peak deviation of the RF signal generator should be 0.35 times the receiver IF bandwidth. Capture a plot of the oscilloscope display. Measure the rise time, overshoot, and settling time. Record this information on Data Sheet 4-12.

4.12.3.4 Data Reduction. Compare the results with the specification.

Data Sheet: 4-12	Telemetry Receivers
Test 4.12	**Receiver band pass frequency response using unmodulated signal**

Receiver Manufacturer: **Model:**

Serial No: _____

Test Personnel: **Center frequency:** _____ **MHz**

IF BW: _____ **kHz** **Video BW:** _____ **kHz**

AFC/APC

First LO mode: _____ XTAL: _____ VFO: _____

Test personnel: Date: Location:

Rise Time: _____microseconds

Overshoot: _____percent

Settling Time: _____microseconds

4.13 TEST: Receiver Band Pass Frequency Response using Unmodulated Signal

4.13.1 Purpose. This test measures the effective receiver band pass bandwidth.

4.13.2 Test Equipment. An RF signal generator, microwave counter, true rms voltmeter, RF counter (optional), wave analyzer (optional), and power splitter.

4.13.3 Test Method. This test measures receiver bandwidth by fixing the receiver gain, varying the input frequency, and measuring the linear IF output amplitude. This test works well for receivers that have stable manual gain control (MGC) and linear IF output. This test is suitable for manual or computer controlled testing.

4.13.3.1 Setup. Connect the test equipment as shown in Figure 4-15. The rms voltmeter can be used to test for less than 30 dB of filter attenuation. The wave analyzer and RF counter must be used for tests where greater attenuation is to be measured.

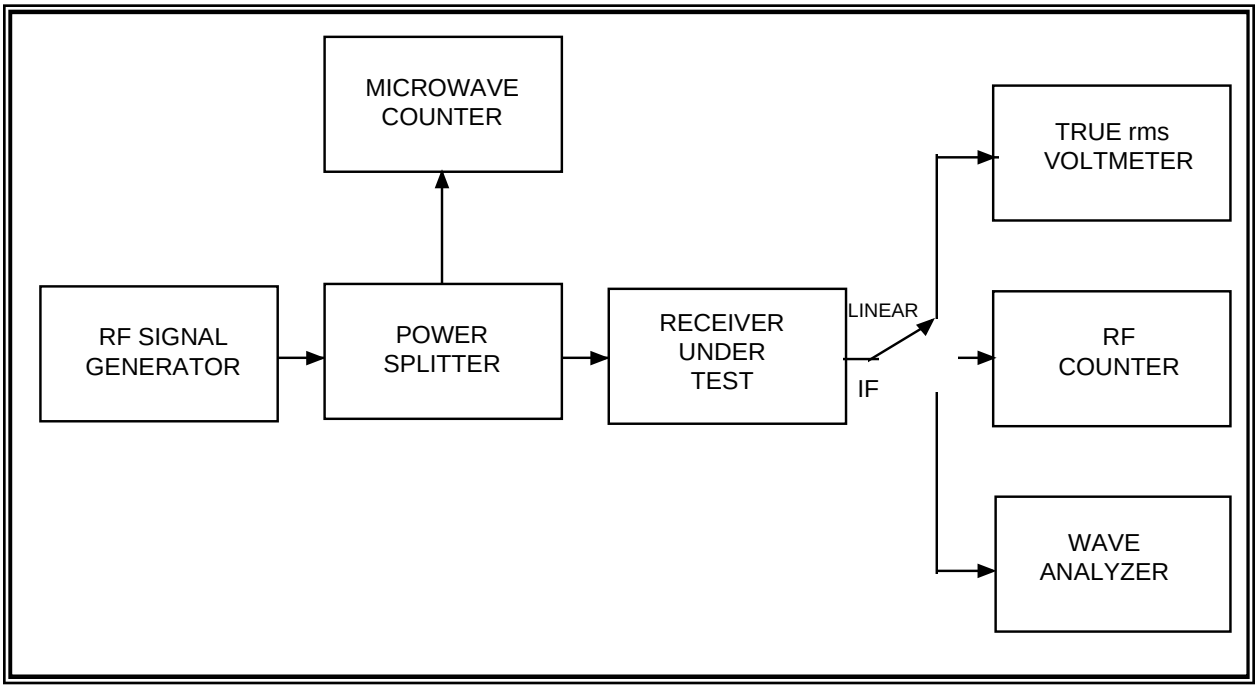

Figure 4-15. Receiver band pass response using unmodulated signal (see test 4.13).

4.13.3.2 Conditions. The RF signal generator frequency should be set to the receiver center frequency. The output power should be set to give a receiver IF SNR of greater than 30 dB, however, do not saturate the receiver. The receiver local oscillator should be in crystal or synthesizer mode whenever possible. Automatic frequency control (AFC) modes cannot be used for this test. The wave analyzer band pass filter should be set to approximately 3 kHz. The receiver gain must remain fixed for the duration of the test. The gain of many receivers drifts

with time. This test will not work with a wave analyzer if the RF signal generator or receiver under test has excessive phase modulation or frequency drift.

4.13.3.3 Procedure.

4.13.3.3.1 Measure the amplitude of the signal at the output of the linear IF with the receiver in the AGC mode. Put the receiver in the MGC mode and set the linear IF output amplitude to a value approximately equal to the value measured in the AGC mode. Increase the RF generator output power by 6 dB. The linear IF output amplitude should increase by 6 ±0.5 dB. If it does not, decrease the linear IF output amplitude by 6 dB using the MGC and repeat until this condition is satisfied.

4.13.3.3.2 Set the RF generator to its original power level and measure the linear IF amplitude (MGC mode). Disconnect the RF generator and measure the linear IF output amplitude. (This step can be skipped if the wave analyzer is used.) Record this value on Data Sheet 4-13 as the baseline noise level.

4.13.3.3.3 Reconnect the RF generator to the receiver under test. If the wave analyzer is to be used in this test, count the frequency of the receiver IF output. Record on Data Sheet 4-13 as the center frequency IF output frequency. This value will be used to calculate the measurement frequencies for the wave analyzer.

Increase the RF generator frequency by 10 kHz. Measure the linear IF output frequency. If it increased by 10 kHz, the receiver IF output tracks the input. If it decreased by 10 kHz, the receiver IF output frequency change is opposite to the input change. If the frequency changes by some other amount, a problem exists and an investigation is necessary.

4.13.3.3.4 Set the RF generator to a frequency equal to the receiver center frequency minus two times the IF bandwidth (minus one times the IF bandwidth if a true rms voltmeter is used). Set the wave analyzer to a frequency equal to the IF frequency measured in subparagraph 4.13.3.3.3 minus two times the IF bandwidth if the IF frequency tracks the input frequency (plus two times the IF bandwidth if the IF frequency change is opposite to the input frequency change). Measure the amplitude of the linear IF output (using true rms voltmeter or wave analyzer) and record on Data Sheet 4-13 along with the RF input frequency.

4.13.3.3.5 Increase the RF generator frequency by 0.25 times the receiver IF bandwidth setting. Set the wave analyzer frequency to the calculated IF frequency. Measure the amplitude of the linear IF output and record on Data Sheet 4-13 along with the RF input frequency. Repeat this step until the RF generator frequency is equal to the receiver center frequency plus two times the IF bandwidth (plus one times the IF bandwidth if a true rms voltmeter is used).

NOTE	This test can be performed with any frequency step size that is desired. A quick test can be performed with a step size of 0.5 times the receiver IF bandwidth setting. A test which measures the IF response in more detail may use a step size of 0.05 or 0.1 times the receiver IF bandwidth setting.

4.13.3.4 Data Reduction.

4.13.3.4.1 The rms voltmeter readings can be corrected for background noise by subtracting the background noise power (voltage squared) from the measured values. If the measured value was 7.4 mV rms and the background noise was 4.8 mV rms, the signal amplitude was

$$\sqrt{7.42^2 - 4.82^2} = \sqrt{54.76 - 23.04} = 5.63\,mV. \qquad \text{(Eq. 4-7)}$$

The wave analyzer values do not need to be corrected because the 3 kHz band pass filter does not pass much noise and the noise power decreases beyond the receiver IF filter band edges.

4.13.3.4.2 The 3 dB bandwidth of the IF filter can be calculated by finding the input frequencies where the signal was attenuated by slightly more than 3 dB with respect to the signal at center frequency. Perform a linear interpolation between this frequency and the adjacent frequency where the signal was attenuated by slightly less than 3 dB to find the approximate upper and lower 3 dB frequencies. That is, if the signal was attenuated by A_1 dB at frequency f_1 and A_2 dB at frequency f_2, the approximate 3 dB frequency would be

$$f_1 + \frac{A_1 - 3}{A_1 - A_2}(f_2 - f_1) \qquad \text{(Eq. 4-8)}$$

Let f_1 = 10.45 MHz,
f_2 = 10.5 MHz,
A_1 = 2.2 dB,
A_2 = 3.2 dB,

then $f_{-3\,dB}$ = 1 0.45 + {(2.2 - 3) / (2.2 - 3.2)} • (10.5 - 10.45) = 10.49 MHz.

4.13.3.4.3 The receiver IF filter equivalent noise power bandwidth (ENPBW) with respect to the center frequency can be calculated by dividing the measured power at each frequency by the measured power at the center frequency and then multiplying each of these values by the frequency step size and adding all of these values.

Data Sheet: 4-13	Telemetry Receivers
Test 4.13	**Receiver band pass frequency response using unmodulated signal**

Manufacturer: **Model:**

Serial No: _____

Test Personnel: _____ **Center frequency:** _____ **MHz**

IF BW: _____ **kHz** **Video BW:** _____ **kHz**

Final LO mode: _____ XTAL: _____ VFO: _____

Test personnel: _____ Date: Location: _____

Baseline noise level: _____ Center frequency IF output frequency: _____

RF input frequency	Linear IF output amplitude	Corrected linear IF output amplitude

Upper –3 dB frequency _____

Lower –3 dB frequency _____

–3 dB bandwidth _____

Equivalent noise power bandwidth _____

4.14 TEST: Receiver Band Pass Frequency Response using Phase-Modulated Signal

4.14.1 Purpose. This test measures the effective receiver band pass bandwidth.

4.14.2 Test Equipment. An RF signal generator with PM capability, sine wave generator, microwave counter, microwave spectrum analyzer, RF counter, wave analyzer (or spectrum analyzer), and power splitter.

4.14.3 Test Method. This method measures receiver bandwidth using a phase modulated carrier. It takes advantage of the principle that the amplitudes of the Bessel sidebands of a PM carrier do not change with the modulating frequency (phase deviation held constant). The method is especially well suited to automated testing. It is not recommended for manual testing. This method also works for receivers which do not have MGC.

4.14.3.1 Setup. Connect the equipment as shown in Figure 4-16.

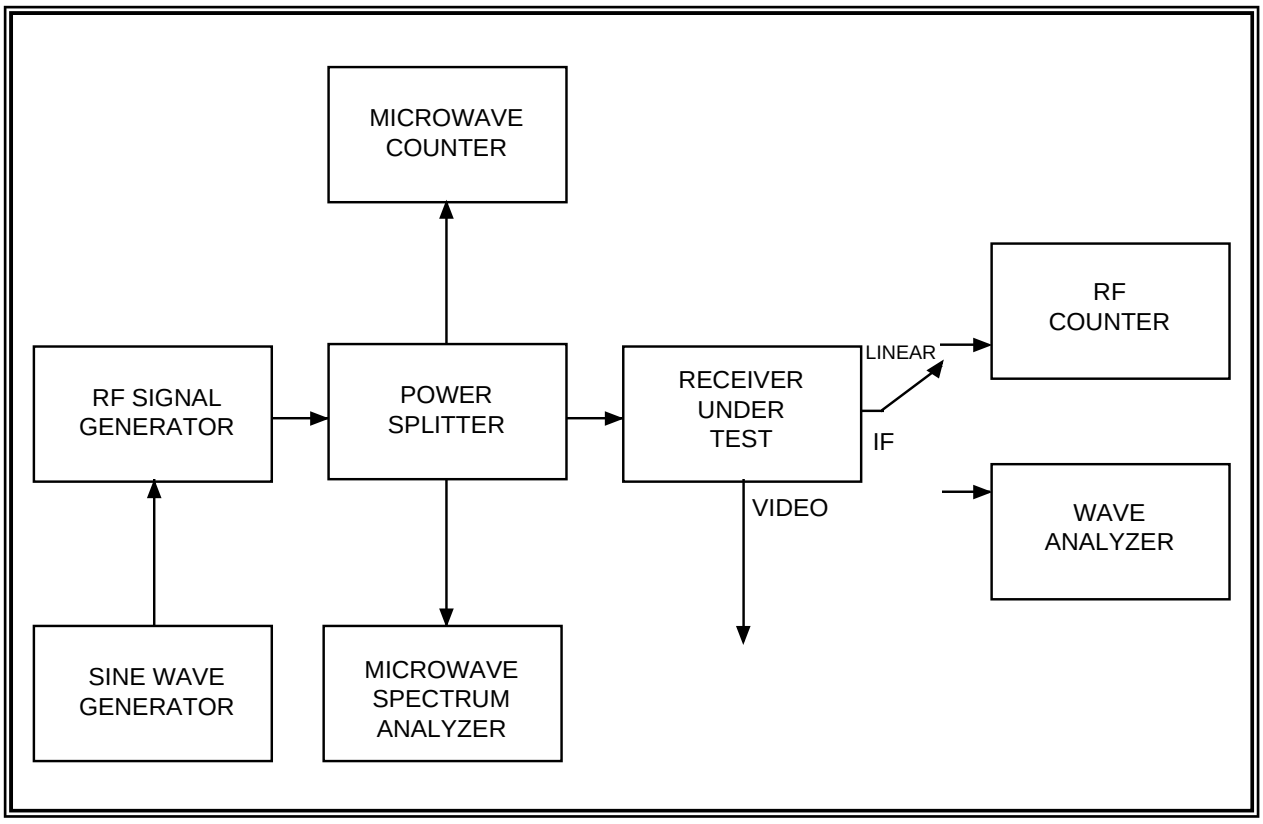

Figure 4-16. Receiver band pass response using phase-modulated signal (see test 4.14).

4.14.3.2 Conditions. The RF signal generator should be set to

Output frequency: receiver center frequency
Output power: sufficient to give >30-dB IF SNR or as desired.

The wave analyzer (or spectrum analyzer) resolution bandwidth should be set to 3 kHz. For narrow IF bandwidths, use a resolution bandwidth no wider than 0.03 times the receiver IF bandwidth.

4.14.3.3 Procedure.

4.14.3.3.1 The first step in this procedure will be to set the peak phase deviation to approximately 82°. Increase the amplitude of the sine-wave generator (frequency = 10 kHz), while monitoring RF signal using spectrum analyzer, until the carrier component and the first order sidebands are equal in amplitude. The second order sidebands should be approximately

8 dB lower in amplitude. Increase the sine wave generator frequency to a value equal to two times the receiver IF bandwidth. Verify that the amplitudes of the carrier component and the first order sidebands are within ±1 dB of each other. If they are not within ±1 dB, the RF generator does not have sufficient bandwidth to perform this test.

NOTE 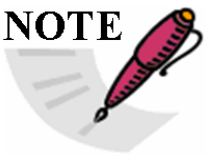	This method will not work if the RF signal generator or receiver under test has excessive incidental phase, frequency modulation, or frequency drift.

4.14.3.3.2 Set the sine wave generator to a frequency equal to 0.05 times the receiver IF bandwidth (50 kHz for a 1 MHz IF bandwidth). Measure and record the frequency of the carrier component and the amplitudes of the carrier component and both first order sidebands at the receiver linear IF output. F_C represents carrier frequency translated to the receiver IF and F_M represents modulating frequency; therefore, the frequency of the lower first order sideband is $F_C - F_M$. Increase the sine wave generator frequency in steps of 0.05 times the receiver IF bandwidth. The maximum frequency will be two times the receiver IF bandwidth. Measure and record on Data Sheet 4-14 the amplitudes of the carrier component and both first order sidebands. Sample Data Sheet 4-14 is included to show calculations.

4.14.3.4 Data Reduction

4.14.3.4.1 Average the values of the first order sideband amplitudes at a modulation frequency of 0.05 times the IF bandwidth (BW). Subtract this value from the amplitude of the carrier component with this modulating frequency. Use this value as a correction value for all other data points. Subtract the amplitude of the carrier component from each sideband amplitude and add the correction value. Repeat for all modulating frequencies.

4.14.3.4.2 The 3 dB bandwidth of the IF filter can be calculated by finding the input frequencies where the signal was attenuated by slightly more than 3 dB with respect to the signal at center frequency. Perform a linear interpolation between this frequency and the adjacent frequency, where the signal was attenuated by slightly less than 3 dB, to find the approximate upper and lower 3 dB frequencies. That is, if the signal was attenuated by A_1 dB at frequency f_1 and A_2 dB at frequency f_2, the approximate –3 dB frequency would be

$$f_1 + \frac{A_1 - 3}{A_1 - A_2}(f_2 - f_1) \qquad \text{(Eq. 4-9)}$$

Let: f_1 = 10.45 MHz,
f_2 = 10.5 MHz,
A_1 = 2.2 dB,
A_2 = 3.2 dB,

then $f_{-3\,dB}$ = 10.45 + {(2.2 – 3)/(2.2 – 3.2)} (10.5 – 10.45) = 10.49 MHz.

4.14.3.4.3 The receiver IF filter equivalent noise power bandwidth with respect to the center frequency can be calculated by dividing the measured power at each frequency by the measured power at the center frequency and then multiplying each of these values by the frequency step size and adding all of these values.

Data Sheet: 4-14	**Telemetry Receivers**
Test 4.14	**Receiver band pass frequency response using a phase-modulated signal**

Manufacturer:	**Model:**
Serial No:	
Test Personnel:	**Center frequency:** _____ **MHz**
IF BW: **kHz**	**Video BW:** **kHz**

Final LO mode: _____ XTAL: _____ VFO: _____

Test personnel: _____ Date: _____ Location: _____

Measured frequency at receiver IF output (F_C) _____ kHz

Modulating Frequency	F_C Amplitude (dB)	FC – FM Amplitude (dB)	FC + FM Amplitude (dB)

Upper –3 dB frequency _____

Lower –3 dB frequency _____

–3 dB bandwidth _____

Equivalent noise power bandwidth _____

Data Sheet: 4-14	(SAMPLE)	Telemetry Receivers
Test 4.14	**Receiver band pass frequency response using a phase-modulated signal**	

Manufacturer: **Model:**

Serial No: 366

Test Personnel: **Center frequency:** 2250.5 **MHz**

IF BW: 1000 **kHz** **Video BW:** 500 **kHz**

Final LO mode: _____ XTAL: X VFO: _____

Test personnel: _____ Date: 4/16/89 Location: _____

Measured frequency at receiver IF output (F_C) 20000 kHz

Modulating Frequency	F_C Amplitude (dB)	$F_C - F_M$ Amplitude (dB)	$F_C + F_M$ Amplitude (dB)
50 kHz	-12.98	-13.16	-13.24
450 kHz	-10.98	-13.52	-14.07
500 kHz	-10.58	-13.85	-14.52
1000 kHz	-8.04	-26.51	-28.22
1500 kHz	-7.92	-49.19	-51.27
2000 kHz	-7.94	-69.50	-70.72

Upper –3 dB frequency 20 458 kHz

Lower –3 dB frequency 19 504 kHz

–3 dB bandwidth 954 kHz

Equivalent noise power bandwidth 972 kHz

4.15 TEST: Receiver Band Pass Frequency Response using White Noise Input

4.15.1 Purpose. This test measures the effective receiver band pass bandwidth.

4.15.2 Test Equipment. Spectrum analyzer (or wave analyzer) with resolution bandwidth <10 percent of specified receiver band pass filter bandwidth and effective video bandwidth of <1 percent of resolution bandwidth, white noise generator, and oscilloscope camera or plotter for recording spectrum analyzer display.

4.15.3 Test Method. This method measures receiver bandwidth using a white noise input signal. A telemetry preamplifier with a terminated input can be used as a noise generator. This test can also be performed with the receiver RF input terminated. The results may change depending on the amount of noise generated in various sections of the receiver. This test can be performed with receivers in the AGC mode and can also be performed on receivers with only a limited IF output. This test is suited for both manual and computer controlled testing.

4.15.3.1 Setup. Connect the test equipment as shown in Figure 4-17.

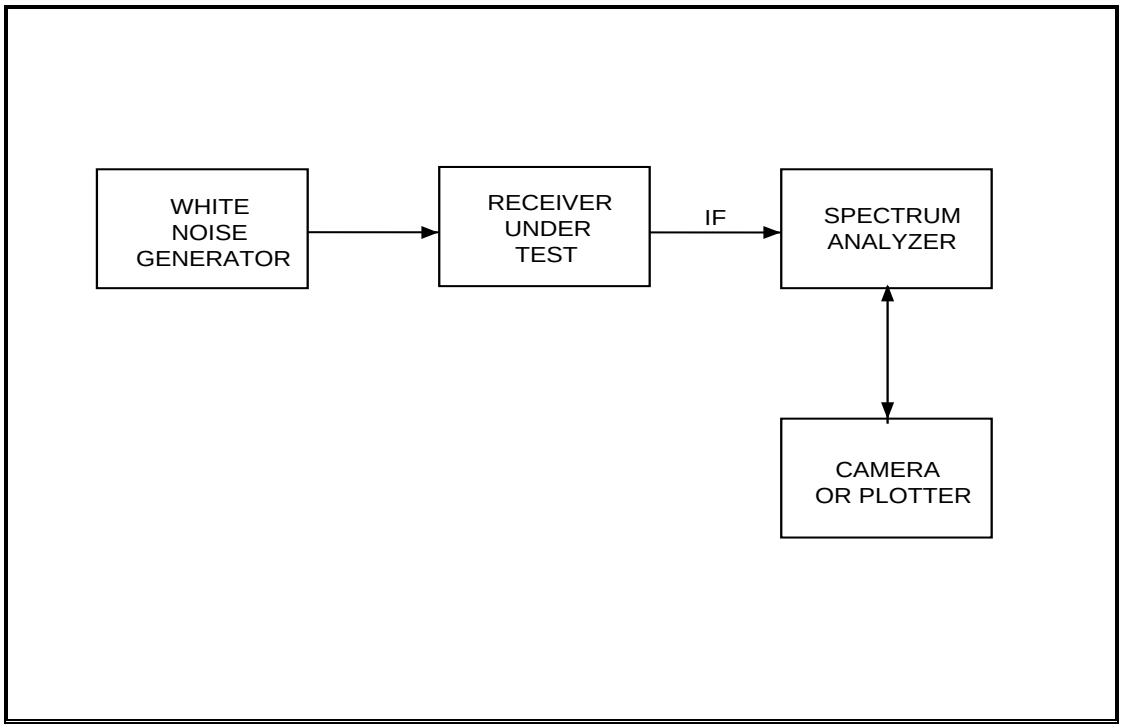

Figure 4-17. Receiver band pass response using white noise (see test 4.15).

4.15.3.2 Conditions. Set the spectrum analyzer center frequency to the receiver IF output center frequency. Set the spectrum analyzer sweep width to sweep from IF center frequency minus two times specified IF bandwidth to IF center frequency plus two times specified IF bandwidth. For a receiver with a 10 MHz IF output and a 1 MHz IF bandwidth, the spectrum analyzer would be set to sweep from 8 MHz to 12 MHz with a 30-kHz resolution bandwidth (100 kHz optional) and a 300 Hz video bandwidth. If the spectrum analyzer only has certain span settings, use the smallest setting which is greater than or equal to the calculated setting.

4.15.3.3 Procedure. Measure and record the noise spectrum at the receiver IF output. Estimate the gain (loss) at the frequencies listed on Data Sheet 4-15. Attach the photograph or plot to the Data Sheet.

4.15.3.4 Data Reduction. Estimate (calculate) the –3-dB bandwidth of the receiver band pass output. Record this value on Data Sheet 4-15.

Data Sheet: 4-15	**Telemetry Receivers**
Test 4.15	**Receiver band pass frequency response using white noise input**

Manufacturer:		**Model:**	
Serial No:			
Test Personnel:		**Center frequency:**	**MHz**
IF BW:	**kHz**	**Video BW:**	**kHz**

Final LO mode: _____ XTAL: _____ VFO: _____

Test personnel: _____ Date: _____ Location: _____

Frequency	**Amplitude** (dB)
F_0	
$F_0 – BW/2$	
$F_0 + BW/2$	
$F_0 – BW$	
$F_0 + BW$	
$F_0 – 2\ BW$	
$F_0 + 2\ BW$	

F_0 = IF center frequency BW = IF bandwidth (–3 dB)

Estimated –3-dB bandwidth _____

4.16 TEST: Data Frequency Response

4.16.1 Purpose. This test measures the data frequency response of a telemetry receiver.

4.16.2 Test Equipment. Sine wave generator, RF signal generator which can be frequency modulated or phase modulated or both, microwave counter, oscilloscope, rms voltmeter, and microwave spectrum analyzer.

4.16.3 Test Method. This test measures data frequency response by measuring the receiver video output level while varying the modulation frequency. The carrier deviation is kept at a constant value.

4.16.3.1 Setup. Connect the test equipment as shown in Figure 4-18.

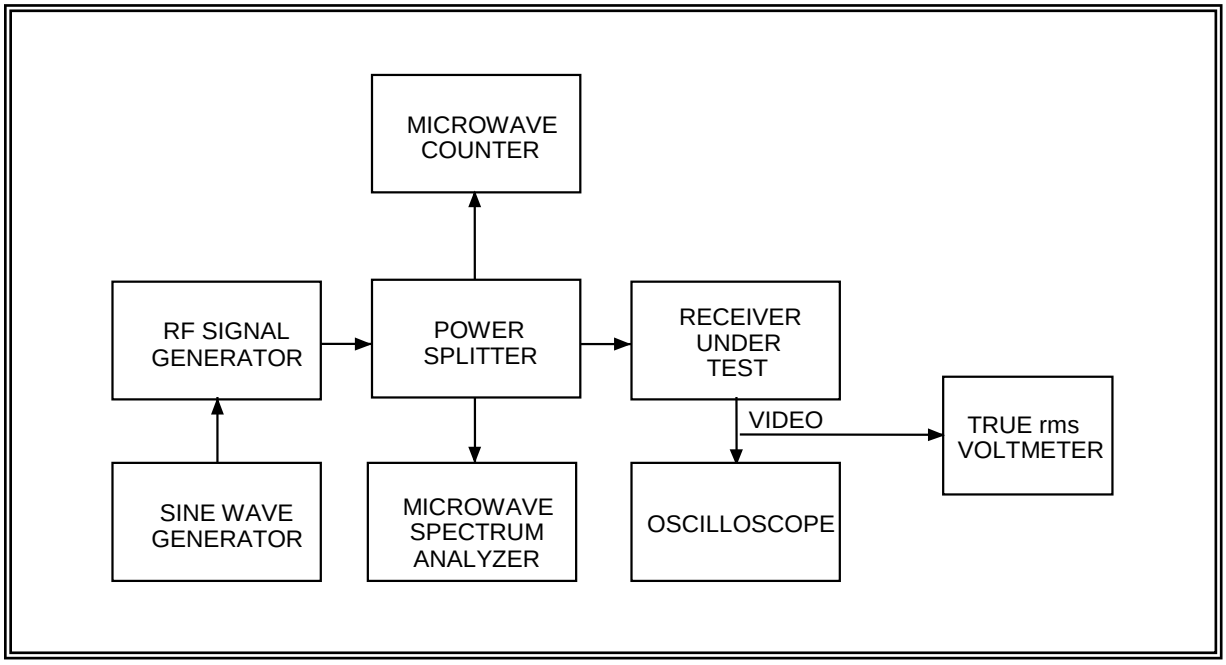

Figure 4-18. Receiver data frequency response (see test 4.16).

4.16.3.2 Conditions. The signal generator should be set to

Output frequency: receiver center frequency
Output amplitude: sufficient to give >30-dB IF SNR.

The receiver video output should be set to approximately 0 Vdc with an unmodulated center frequency input.

4.16.3.3 Procedure.

4.16.3.3.1 The first step in this procedure will be to set the RF signal generator peak deviation. If a receiver with an FM demodulator is being used, set the peak deviation equal to the selected video bandwidth. (The IF bandwidth should be at least twice the video bandwidth.) The peak deviation can be set using Bessel nulls or whatever method is familiar to the test operator. If a receiver with a PM demodulator is being used, set the peak deviation to 82°. Set the sine wave oscillator frequency to two times the video bandwidth. Measure the difference (in dB) between the modulated carrier amplitude and the amplitudes of the first sideband pair. This difference should be 11.8 dB for frequency modulation (sidebands lower than modulated carrier) and 0 dB for phase modulation. If both sidebands are not between 10.8 and 12.8 dB (±1 dB for phase modulation) lower than the modulated carrier, the frequency response of the signal generator is not adequate for this test, and a different signal generator must be used.

NOTE 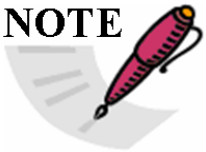	This test can also be performed using a spectrum analyzer with tracking generator in place of the sine wave generator and true rms voltmeter.

4.16.3.3.2 Set the sine wave oscillator frequency to one-tenth of the receiver video bandwidth. Maintain the sine wave oscillator amplitude equal to the value determined in subparagraph 4.16.3.3.1. Measure the output on the rms voltmeter and record on Data Sheet 4-16.

4.16.3.3.3 Increase the sine wave oscillator frequency (amplitude held constant) in steps of one-tenth of the receiver video bandwidth. The highest sine wave oscillator frequency will be equal to twice the receiver video bandwidth. Measure and record the video output on Data Sheet 4-16 for each frequency.

4.16.3.4 Data Reduction. Subtract the video output amplitude (in dB) at one-tenth the video bandwidth from the amplitude at each of the other frequencies. Record on Data Sheet 4-16.

Data Sheet: 4-16	**Telemetry Receivers**
Test 4.16	**Data frequency response**

Manufacturer: **Model:**

Serial No: **Center frequency:** **MHz**

IF BW: **kHz** **Video BW:** **kHz**

Final LO mode: XTAL: VFO: AFC/APC

FM PM Other ( )

Test personnel: Date: Location:

Video Bandwidth (VBM)	**Frequency**	**Amplitude** (dB)	**Relative Amplitude** (dB)
0.1			
0.2			
0.3			
0.4			
0.5			
0.6			
0.7			
0.8			
0.9			
1.0			
1.1			
1.2			
1.3			
1.4			
1.5			
1.6			
1.7			
1.8			
1.9			
2.0			

4.17 TEST: Automatic Gain Control Stability

4.17.1 Purpose. This test measures the stability of the receiver AGC system versus time.

4.17.2 Test Equipment. Chart recorder, dc voltmeter, RF generator (optional), microwave counter (optional), and power splitter (optional).

4.17.3 Test Method. This test measures and records the variations in AGC over a specified time interval with no input signal applied to the receiver. This test can also be performed with a stable, non-saturating RF signal applied to the receiver input.

4.17.3.1 Setup. Connect the test equipment as shown in Figure 4-19.

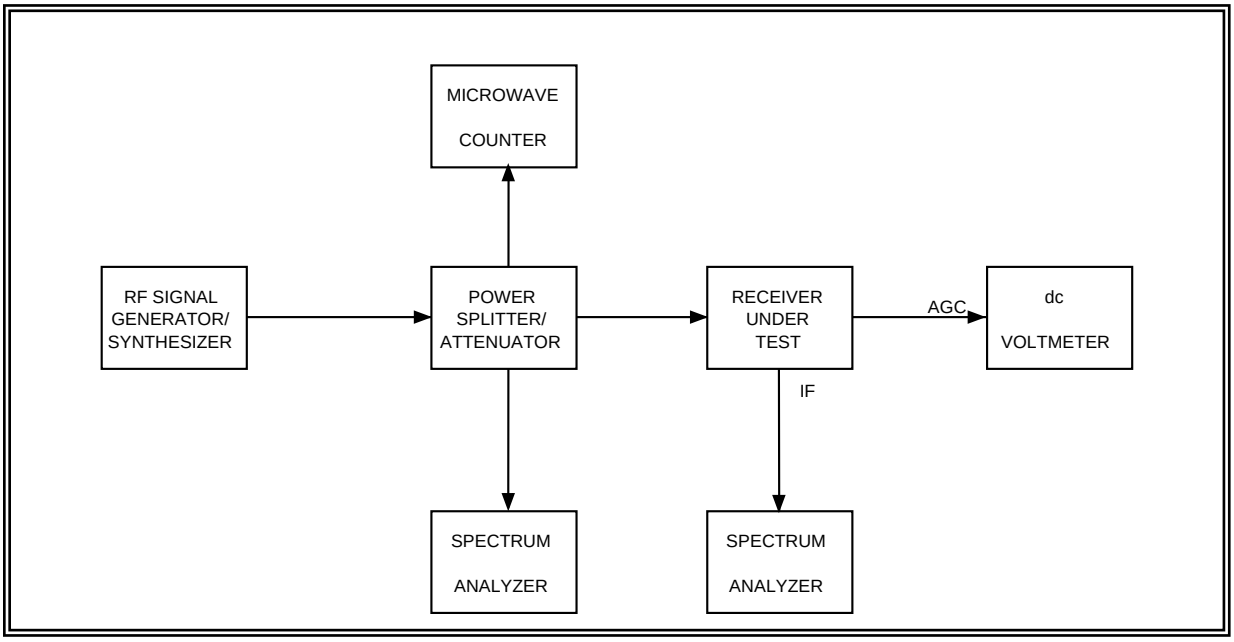

Figure 4-19. Receiver AGC stability (see test 4.17).

4.17.3.2 Conditions. The receiver should be turned on before the start of the test for the specified warm-up time. The RF generator (if used) must also be stabilized before the test is started. The RF generator should be set to the receiver center frequency.

4.17.3.3 Procedure. Start the pen recorder and record the receiver AGC voltage for the length of time desired. (Eight hours is a reasonable time interval.) If a computer controlled test system is available, read the dc voltmeter on a periodic basis, and store the data. At least 100 readings should be taken during the test. Record the total test time and the starting and ending AGC values on Data Sheet 4-17.

4.17.3.4 Data Reduction. Find the maximum and minimum values of AGC voltage. Record these values on Data Sheet 4-17. Subtract the minimum value from the maximum value and record this value as the total change during the test interval.

Data Sheet: 4-17	Telemetry Receivers
Test 4.17	**Automatic gain control stability**

Manufacturer: **Model:**

Serial No: **Center frequency:** **MHz**

IF BW: **kHz** **AGC time constant:** **ms**

Final LO mode: **XTAL:** **VFO:** AFC/APC

FM **PM** **Other** ( )

Test personnel: **Date:** **Location:**

Total test time	
AGC voltage at start of test	
AGC voltage at end of test	
Maximum AGC voltage	
Minimum AGC voltage	
Total change (maximum – minimum)	

4.18 TEST: Receiver Video Spurious Outputs

4.18.1 Purpose. This test measures the amplitude of any spurious signals at the demodulator output.

4.18.2 Test Equipment. An RF signal generator with FM or PM or both capabilities, sine wave generator, microwave spectrum analyzer, low frequency spectrum analyzer or wave analyzer, oscilloscope, microwave counter, and power splitter.

4.18.3 Test Method. The video output spectrum is monitored for discrete output signals with a strong, unmodulated input signal.

4.18.3.1 Setup. Connect the test equipment as shown in Figure 4-20.

4.18.3.2 Conditions. Set the RF signal generator frequency to the receiver center frequency. Set the RF generator output power to –50 dBm. The receiver IF bandwidth and video output filter should be set to their widest settings.

4.18.3.3 Procedure.

4.18.3.3.1 Adjust the amplitude of the sine wave generator to produce a peak frequency deviation of 100 kHz if an FM demodulator is being tested or a peak phase deviation of 1 radian if a PM demodulator is being tested. This deviation can be checked by modulating with a 100 kHz sine wave. The modulation index will be 1 for both FM and PM. At a modulation index of 1, the first order sideband pair should both be attenuated by approximately 4.8 dB with respect to the carrier, and the second order pair should be approximately 16.5 dB lower than the carrier.

4.18.3.3.2 Tune the receiver to center the input signal if necessary. Measure the amplitude at the receiver video output at a frequency of 100 kHz with the resolution bandwidth of the spectrum analyzer (or wave analyzer) set to 1 or 3 kHz (whichever is available). Record this value on Data Sheet 4-18 as the measurement reference.

4.18.3.3.3 Set the RF generator to the continuous wave mode. Verify that no spectral sideband components are within ±1 receiver IF bandwidth of the RF generator center frequency. If any components produced by angle modulation are present, they will appear at the receiver video output.

4.18.3.3.4 Measure the amplitude and frequency of any discreet signals in the receiver video output. Record these values on Data Sheet 4-18.

4.18.3.3.5 Monitor the receiver video output on the oscilloscope. Check for low frequency signals that the spectrum analyzer could not resolve such as 60 Hz and multiples thereof. Record the approximate amplitude and frequency of any low frequency signals on Data Sheet 4-18

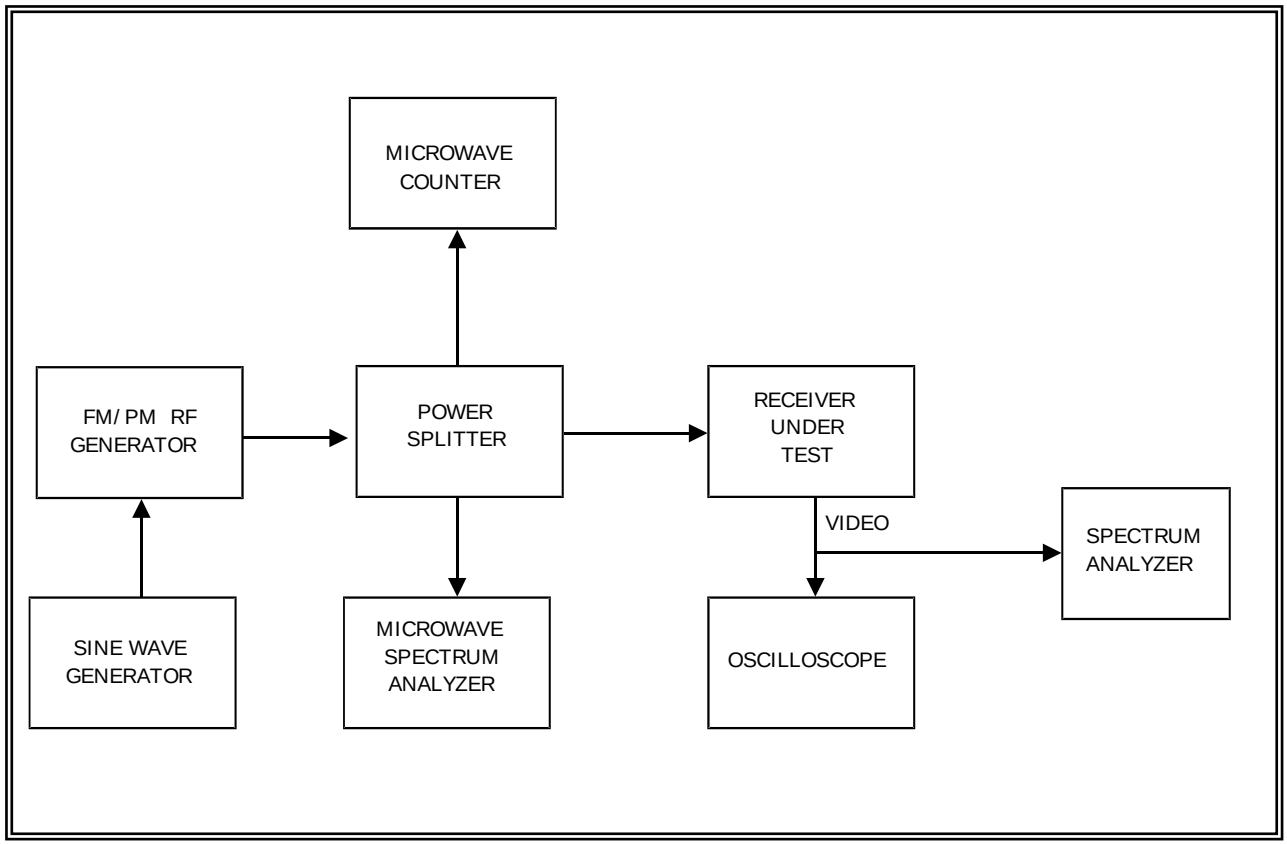

Figure 4-20. Receiver video spurious outputs (see test 4.18)

4.18.3.4 Data Reduction. Convert the amplitudes of the signals measured in subparagraph 4.18.3.3.4 to effective peak deviation by using one of the following equations:

Measurements in dBm and dBV:

$$\text{Effective peak deviation} = 10^{z} \bullet \text{reference peak deviation} \qquad \text{(Eq. 4-10)}$$

Measurements in volts:

$$\text{Effective peak deviation} = \frac{\square}{\square} \bullet \text{reference peak deviation} \qquad \text{(Eq. 4-11)}$$

Where:

A_i = amplitude measured in subparagraph 4.18.3.3.4
A_{ref} = amplitude measured in subparagraph 4.18.3.3.2
z = $(A_i - A_{ref}) / 20$

Reference peak deviation = 100 kHz or 1 radian

The effective peak deviation of signals measured in subparagraph 4.18.3.3.5 can be calculated using these equations provided the amplitudes are converted to the same units used to make the reference measurement.

Data Sheet: 4-18	Telemetry Receivers
Test 4.18	**Receiver video spurious outputs**

Manufacturer: **Model:**

Serial No: **Center frequency:** **MHz**

IF BW: **kHz** **Video BW:** **kHz**

Final LO mode: **XTAL:** **VFO:** AFC/APC

Test personnel: **Date:** **Location:**

Demodulator type: ☐ FM ☐ PM

Measurement reference amplitude

Spurious Signals

Frequency	Amplitude	Effective Peak Deviation

4.19 TEST: Predetection Carrier Output

4.19.1 Purpose. This test measures the amplitude, frequency stability, and accuracy of the receiver predetection carrier output. Output instability and frequency errors could be caused by problems in any of the receiver local oscillators.

4.19.2 Test Equipment. An RF signal generator, microwave counter, counter, true rms voltmeter, power splitter, and wave analyzer (optional).

4.19.3 Test Method. This test measures the frequency and amplitude of the pre-detection output with a strong, unmodulated RF input signal. This test is suitable for manual or computer controlled testing. The predetection down converter may be in the receiver, in a diversity combiner, or in an external accessory housing.

4.19.3.1 Setup. Connect the test equipment as shown in Figure 4-21.

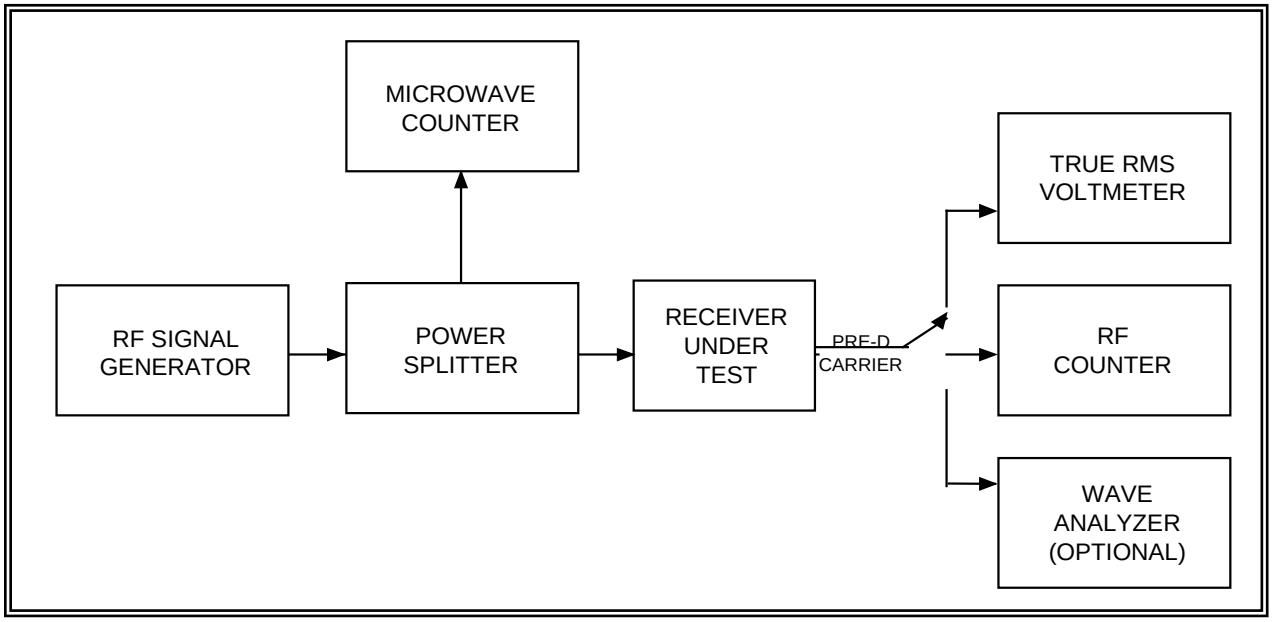

Figure 4-21. Receiver predetection carrier output (see test 4.19).

4.19.3.2 Conditions. The RF signal generator must be stabilized before the test is started. The receiver should be on for the specified warm-up time before the start of the test. Set the RF signal generator frequency to the center frequency of the receiver under test. Set the RF signal generator output power to –50 dBm.

4.19.3.3 Procedure.

4.19.3.3.1 Select a predetection carrier frequency. Measure the amplitude and frequency of the predetection output. Record these values on Data Sheet 4-19. The frequency at the receiver input shall also be counted and recorded on Data Sheet 4-19.

4.19.3.3.2 Repeat subparagraph 4.19.3.3.1 at 5-minute intervals over a 2-hour time interval. The interval between measurements and the total test time can be varied at the discretion of the test personnel.

4.19.3.3.3 This procedure can be repeated for other predetection carriers as desired.

4.19.3.4 Data Reduction. Record the maximum and minimum frequencies and amplitudes measured. Calculate and record the maximum frequency error (measured frequency – selected frequency).

Data Sheet: 4-19	**Telemetry Receivers**
Test 4.19	**Predetection carrier output**

Manufacturer: **Model:**

Serial No: **Center frequency:** **MHz**

IF BW: **kHz** **Video BW:** **kHz**

Final LO mode: **XTAL:** **VFO:** AFC/APC

Test personnel: **Date:** **Location:**

Predetection carrier frequency: kHz

Receiver Input		**Predetection Output**	
Time	**Frequency**	**Frequency**	**Amplitude**

Maximum frequency: kHz

Minimum frequency: kHz

Maximum frequency error: kHz

Maximum amplitude: volts rms

Minimum amplitude volts rms

4.20 TEST: FM Receiver DC Linearity and Deviation Sensitivity

4.20.1 Purpose. This test measures the dc linearity and deviation sensitivity of the demodulator and video amplifier of a dc coupled FM telemetry receiver. This test method is well suited to computer controlled testing.

4.20.2 Test Equipment. An RF frequency synthesizer or RF generator, microwave counter, dc voltmeter, oscilloscope, and power splitter.

4.20.3 Test Method. The RF input frequency is varied in discrete steps and the video output voltage is measured for each input frequency. A best-fit line is calculated. The slope of this line is the deviation sensitivity.

4.20.3.1 Setup. Connect the test equipment as shown in Figure 4-22. The oscilloscope should be used to make sure the video output does not have excessive noise or glitches.

4.20.3.2 Conditions.

4.20.3.2.1 Set the telemetry receiver center frequency and video output filter as desired. Set the receiver local oscillators to crystal mode if possible. Automatic frequency control (AFC) mode is not acceptable.

4.20.3.2.2 Set the receiver final IF filter bandwidth to at least two times the peak deviation to be used in the test.

4.20.3.2.3 Set the generator RF output power to approximately –30 dBm. This power level will produce a high SNR in the receiver under test.

4.20.3.2.4 Terminate the receiver video output with the proper impedance (typically 75 ohms).

4.20.3.2.5 Verify that the receiver video output is dc coupled. This test will not work with an ac coupled video output.

4.20.3.3 Procedure.

4.20.3.3.1 Set the RF frequency to the center frequency of the receiver under test. Adjust the video output voltage to approximately 0 V.

4.20.3.3.2 Increase the RF frequency by an amount equal to the peak deviation to be used in this test. Verify that the receiver video output is not limited by increasing the RF frequency slightly. The video output should change accordingly.

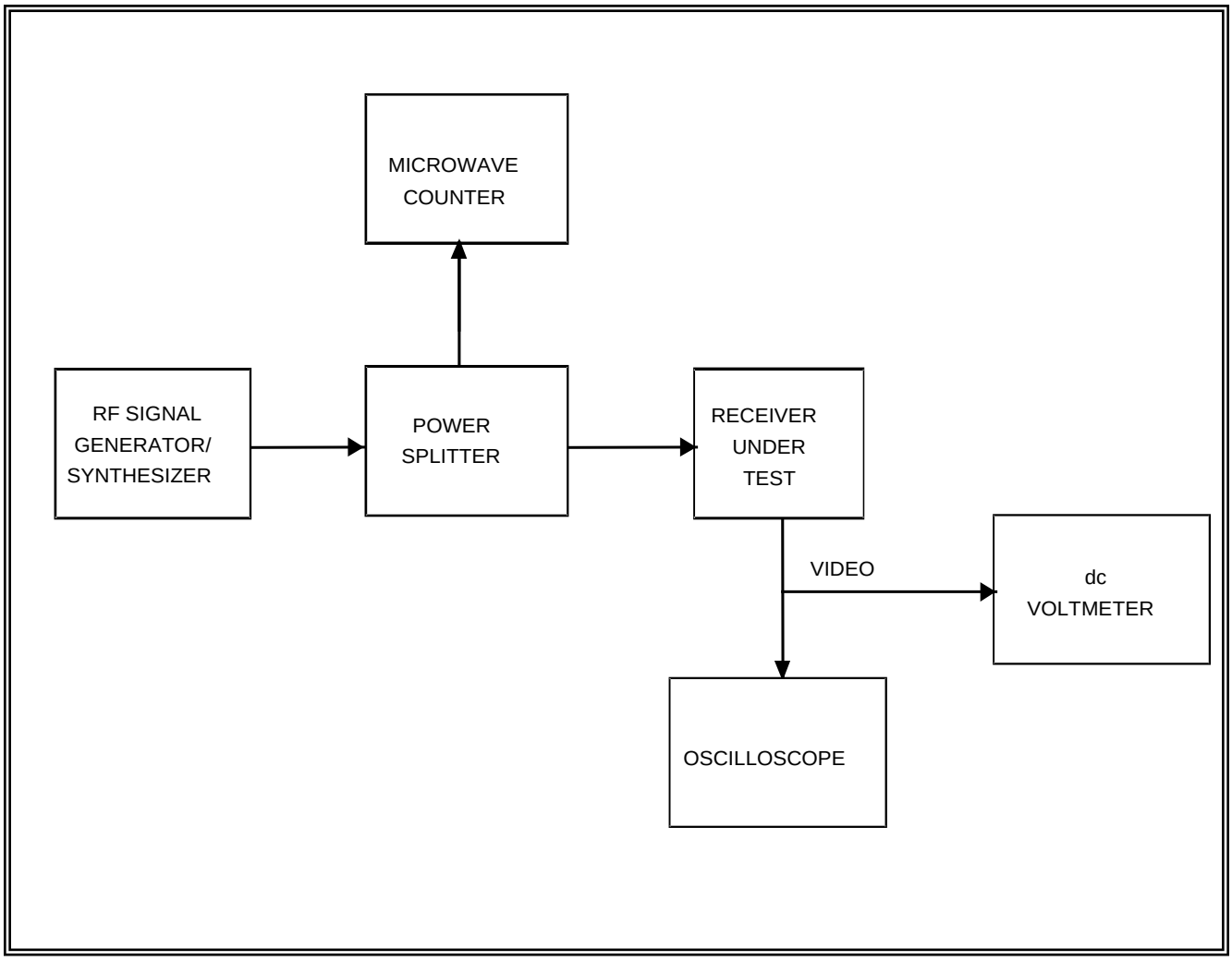

Figure 4-22. FM receiver dc linearity and deviation sensitivity (see test 4.18).

4.20.3.3.3 This test may be performed with any number of equally spaced frequencies that is desired. Commonly used numbers of points are 5, 11, 21, and 41. Select the number of points and call it N. The frequency step size will be:

$$\frac{\text{peak deviation}}{\frac{N-1}{2}} \qquad \text{(Eq. 4-12)}$$

Frequency step sizes for several values of N are listed next (f = peak deviation).

N	Frequency Step Size
5	$\Delta f/2$
11	$\Delta f/5$
21	$\Delta f/10$
41	$\Delta f/20$

The smaller values of N should be used for a quick check of linearity while the larger values of N provide a better characterization of the linearity.

4.20.3.3.4 Set the RF frequency to a frequency equal to the receiver center frequency minus the desired peak deviation. Measure the receiver video output using the dc voltmeter. Record this value on Data Sheet 4-20 along with the measured RF input frequency.

4.20.3.3.5 Increase the RF frequency by one step:

$$\left[\frac{\text{peak deviation}}{\frac{N-1}{2}}\right]$$

Measure and record the video output dc voltage and RF input frequency on Data Sheet 4-20.

4.20.3.3.6 Repeat subparagraph 4.20.3.3.5 until the RF frequency is equal to the receiver center frequency plus the desired peak deviation.

4.20.3.4 Data Reduction. The data reduction consists of calculating the best fit straight line using the least squares method. This line is of the form.

$$V = a + b f \qquad \text{(Eq. 4-11)}$$

Where:

V = *measured output dc voltage (volts)*
a = *calculated video output offset*
b = *calculated deviation sensitivity (volts/kHz)*
f = *(measured input RF frequency – receiver center frequency) (kHz)*

The coefficients a and b can be obtained from the following equations:

$$b = \frac{N\left(\sum_{i=1}^{N} f_i v_i\right) - \left(\sum_{i=1}^{N} v_i\right)\left(\sum_{i=1}^{N} f_i\right)}{N\left(\sum_{i=1}^{N} f^2\right) - \left(\sum_{i=1}^{N} f_i\right)\left(\sum_{i=1}^{N} f_i\right)} \qquad \text{(Eq. 4-13)}$$

And

$$a = \frac{\left(\sum_{i=1}^{N} v_i - b\sum_{i-1}^{N} f_i\right)}{N} \qquad \text{(Eq. 4-14)}$$

The worst case deviation (E_{max}) from the best fit straight line can be calculated using the following equation:

$$E_{\max} = Maximum\left(\left|V_i - a - b\, f_i\right|\right) \qquad \text{(Eq. 4-15)}$$

Data Sheet: 4-20	**Telemetry Receivers**
Test 4.20	**FM Receiver dc linearity and deviation sensitivity**

Manufacturer:		**Model:**		
Serial No:		**Center frequency:**	_____	**MHz**
IF BW: _____	**kHz**	**Video BW:**	_____	**kHz**

Final LO mode: _____ **XTAL:** _____ **VFO:** _____ AFC/APC

Test personnel: _____ **Date:** _____ **Location:** _____

RF Input Frequency (kHz)	Video Output (volts dc)
_____	_____
_____	_____
	_____

a = _____ volts b = _____ Volts/kHz E_{max} = _____ volts

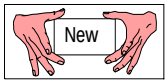

4.21 TEST: Receiver Phase Noise

4.21.1 Purpose. The purpose of this test is to verify that the single sideband phase noise of the receiver meets the specification. Excess phase noise can increase bit error rate at a given E_b/N_o and degrade demodulator synchronization performance. This test assumes that a spectrum analyzer is the only appropriate measurement device available and therefore is limited to frequency offsets greater than 100 Hz. Measurements at lower frequency offsets tend to be very time consuming. Measurements closer to the carrier frequency can be made with very high quality spectrum analyzers exhibiting low internal phase noise and reliable 1-Hz or 3-Hz resolution bandwidth settings. Specialized phase noise test sets are always the best choice especially if measurements must be made at frequency offsets below 100 Hz. The frequency range which has been observed to cause the most problems in current receiver designs is 1 to 20 kHz.

4.21.2 Test Equipment. RF generator with phase noise sidebands at least 10 dB lower than specified phase noise of system to be measured, spectrum analyzer with 10-Hz resolution bandwidth (option: phase noise test set).

4.21.3 Test Method

4.21.3.1 Setup. Connect test equipment as shown on Figure 4-23. If a phase noise test set is available, connect the equipment and conduct the test in accordance with the manufacturer's instructions.

4.21.3.2 Conditions. Use test conditions described in subparagraph 4.0.

4.21.3.3 Procedure.

4.21.3.3.1 Connect the RF generator output to the receiver's RF input and the spectrum analyzer to the receiver's linear IF output. Set the RF generator and receiver frequencies to the same value. Set the RF generator output level to provide a strong signal to the receiver (–30 dBm would usually be a reasonable value).

4.21.3.3.2 If the spectrum analyzer has a phase noise measurement mode, follow the manufacturer's instructions for this test. Otherwise, set the spectrum analyzer center frequency to the receiver final IF output center frequency. Set the span to 200 kHz with continuous sweep. Set the reference level such that the peak of the signal is near the top of the display. Set the center frequency such that the signal is 10 to 20 percent of full scale from the left edge of the display. Set the resolution bandwidth to 1 kHz and video bandwidth to 1 kHz. Average the spectrum over 100 sweeps. Record the maximum signal level on Data Sheet DS 4-21 (0-dBc level). If the analyzer has a power per 1-Hz measurement mode (sometimes referred to as "noise" mode), set the analyzer to that mode. Otherwise, correct for resolution bandwidth and detector error by subtracting 27.5 dB in the signal processing step (–30 dB for conversion from 1-kHz to 1-Hz bandwidth +2.5 dB for typical spectrum analyzer detector error with noise-like signal, 2.5 dB is the approximate correction value for several common spectrum analyzers

including the HP8566B but check your manual for the correct value for the spectrum analyzer used in the test). Use Data Sheet 4-21 to record power levels at frequency offsets of +10 kHz, +20 kHz, +50 kHz, and +100 kHz from the maximum signal (one can use peak search and delta marker functions to simplify the process). Record the frequency and level of any discrete components larger than –45 dBc and any abnormally large continuous components. The results are only valid if the measured levels are at least 6 dB above the spectrum analyzer noise floor.

4.21.3.3.3 Set the spectrum analyzer center frequency to the receiver IF output center frequency. Set the span to 10 kHz with continuous sweep. Set the reference level such that the peak of the signal is near the top of the display and set the center frequency such that the maximum signal is 10 to 20 percent of full scale from the left edge of the display. Set the resolution bandwidth to 100 Hz and video bandwidth to 100 Hz. Average the spectrum over 100 sweeps. Record the maximum signal level on Data Sheet 4-21 (0-dBc level). If the analyzer has a power per 1-Hz measurement mode, set the analyzer to that mode. Otherwise, correct the readings by subtracting 17.5 dB in the signal processing step. Use Data Sheet DS-21 to record the power levels at frequency offsets of +1 kHz, +2 kHz, and +5 kHz from the maximum signal. Record the frequency and level of any discrete components larger than –45 dBc and any abnormally large continuous components.

4.21.3.3.4 (*optional test because of long time duration)* Set the spectrum analyzer center frequency to the receiver IF output center frequency. Set the span to 2 kHz and continuous sweep. Set the reference level such that the maximum value of the signal is at the top of the display and set the center frequency such that the maximum signal is 10 to 20 percent of full scale from the left edge of the display. Set the resolution bandwidth to 10 Hz and video bandwidth to 10 Hz. Average the spectrum over 100 sweeps (this process will take nearly 1 hour). Record the maximum signal level on Data Sheet 4-21 (0-dBc level). If the analyzer has a power per 1-Hz measurement mode, set the analyzer to that mode. Otherwise, correct the readings by subtracting 7.5 dB in the signal processing step. Use Data Sheet 4-21 to record the power levels at frequency offsets of +100 Hz, +200 Hz, and +500 Hz from the maximum signal. Record the frequency and level of any discrete components larger than –45 dBc and any abnormally large continuous components.

4.21.3.4 Data Reduction. Calculate phase noise by subtracting the main signal level from the measured noise level (not needed if delta markers were used to measure levels). If the spectrum analyzer does not have a power per Hz mode, correct for resolution bandwidth and detector errors by subtracting 27.5, 17.5, or 7.5 dB as appropriate (see above).

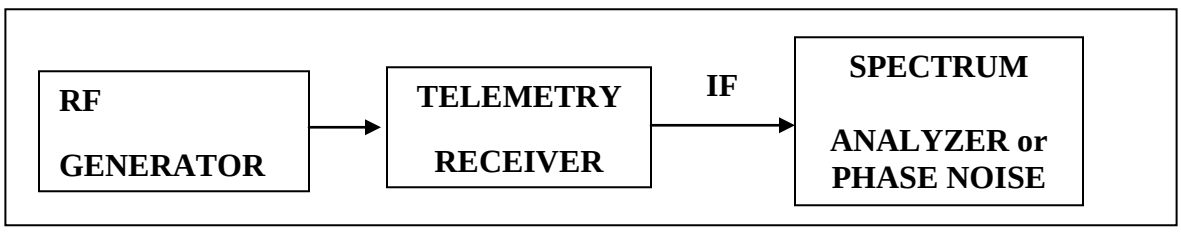

Figure 4-23. Test setup for receiver phase noise test.

Data Sheet: 4-21	**Telemetry Receivers**
Test 4.21	**Receiver phase noise test**

Manufacturer: **Model:**

Serial No: **Center frequency:** **MHz**

Test personnel: **Date:** **Location:**

Frequency (offset from carrier) (kHz)	**Maximum Signal (Carrier) Power** (dBm)	**Measured Power Level** (dBm)	**Phase Noise** (dBc/Hz)
0.1			
0.2			
0.5			
1			
2			
5			
10			
20			
50			
100			

4.22 TEST: Receiver Adjacent Channel Interference

4.22.1 Purpose. The purpose of the adjacent channel interference test is to measure the effect on bit error probability (BEP) of signals in adjacent frequency slots. The results will be a function of modulation methods, receiver filter characteristics, bit rates, relative power levels, frequency spacing, and demodulator characteristics.

4.22.2 Test Equipment. Bit error rate test set, spectrum analyzer, attenuators, signal sources, noise source, power splitters, power meter, and a bit synchronizer if the receiver/demodulator does not include one (a specialized adjacent channel interference test set can be used if one is available).

4.22.3 Test Method

4.22.3.1 Setup. Connect test equipment as shown in Figure 4-24.

4.22.3.2 Conditions. This test can be performed using various modulation types as the interferers. All filtering and deviations should be the same as would typically be used in telemetry operations. The test can also be performed with only one interferer or with two interferers (one above and one below the victim signal). This test can be performed with actual telemetry transmitters or with appropriate laboratory signal generators. The laboratory generators should be passed through an amplifier of the same type as what will be used in the actual transmitters (an amplifier operating in its non-linear range can be used instead of a Class C amplifier if a Class C amplifier is not available). If the purpose of the test is to evaluate performance during a test mission with a specific set of frequencies, bit rates, and modulation types, use these parameters for the test.

4.22.3.3 Procedure.

4.22.3.3.1 Set the receiver and demodulator to the nominal values that would be used to receive the victim signal. Set the bit error test set to generate the desired bit rate with a pseudo noise sequence length of at least $2^{11}-1$ bits. Use this bit error test set as the input to an RF source of the desired type (this signal will be the center signal and called the victim). The modulator output will typically need to be non-linearly amplified. Similarly, modulate the other two RF sources with independent pseudo noise sequences at the same bit rate and non-linearly amplify (the purpose of the non-linear amplification is to emulate a typical telemetry transmitter) the outputs. Set the frequencies of these signals to frequencies spaced the desired amounts (for example, for NRZ-L PCM/FM the desired spacing would be in the range of 2 to 2.5 times the bit rate if all signals were at the same bit rate) above and below the frequency of the victim signal.

4.22.3.3.2 Apply maximum attenuation to the two interferers to effectively remove them from the output (at least 30 dB below desired signal power). Set the attenuation of the victim such that the level at the receiver input is typical of what would be expected in actual use and vary the noise source level to produce a bit error probability of 10^{-5}. Increase the level of the victim signal by 1 dB.

4.22.3.3.3 Use the spectrum analyzer (or alternatively a power meter) to set the relative powers of the signals. A typical starting point is to have the two interfering signals 20 dB larger than the victim signal. Vary the attenuator that is common to the two interferers until the BEP is again 10^{-5}. Measure the power levels of the victim and interferers at the receiver input and record on Data Sheet 4.22.

4.22.3.3.4 Repeat 4.22.3.3.1 through 4.22.3.3.3 for various modulation types, bit rates, center frequencies, and frequency separations, as desired.

4.22.3.4 Data Reduction. Subtract the victim power level from the interferer power level and record on Data Sheet 4.22.

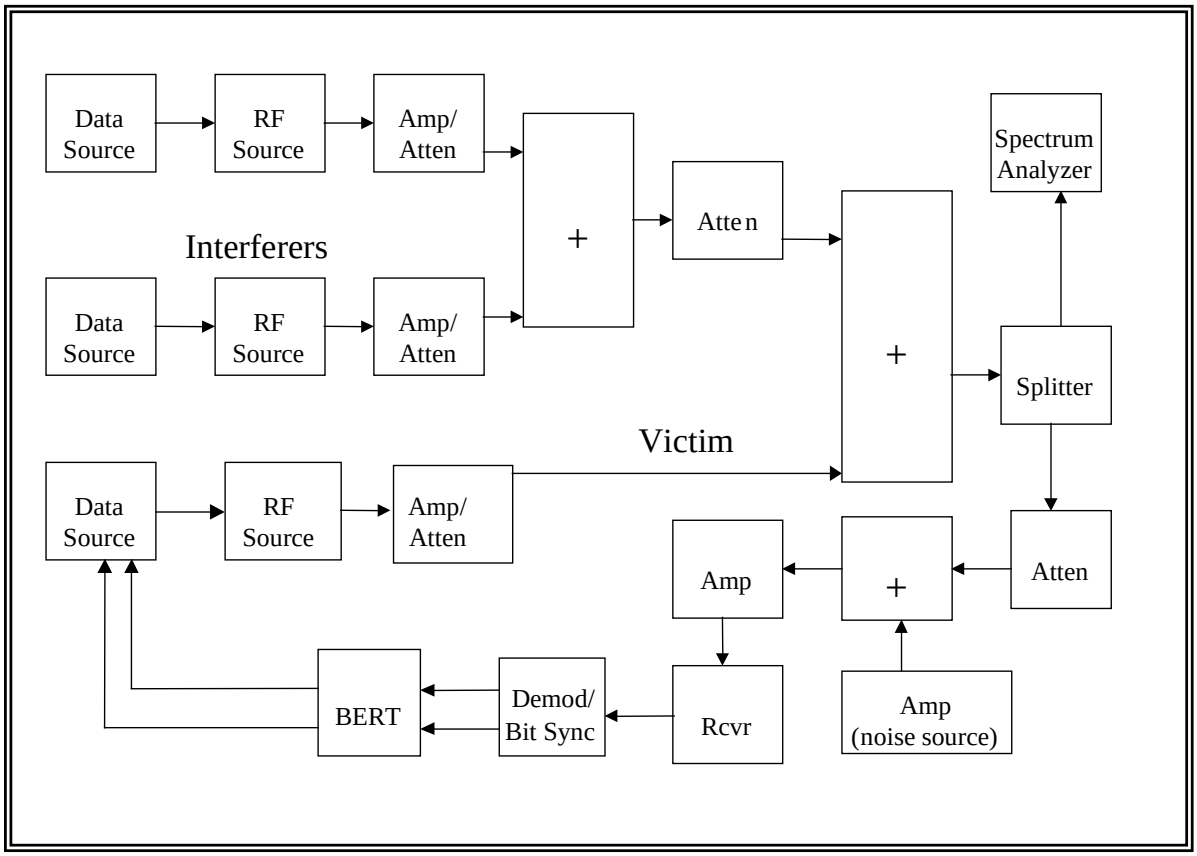

Figure 4-24. Test setup for adjacent channel interference test.

Data Sheet 4-22	Telemetry Receivers
Test 4.5	Adjacent channel interference
Manufacturer:	Model:
Serial No.:	
Test Personnel:	Date:

Receiver IF Bandwidth _____ MHz

Victim: Frequency _____ MHz Bit rate ____ Mb/s Modulation type ____
Peak deviation _____ Filter BW _____ MHz Power _____ dBm

Interferer 1: Frequency _____ MHz Bit rate _____ Mb/s Modulation type ____
Peak deviation _____ Filter BW _____ MHz Power _____ dBm

Interferer 2: Frequency _____ MHz Bit rate _____ Mb/s Modulation type ____
Peak deviation _____ Filter BW _____ MHz Power _____ dBm

Power level difference between Victim and Interferers _____ dB

Receiver IF Bandwidth _____ MHz

Victim: Frequency _____ MHz Bit rate _____ Mb/s Modulation type ____
Peak deviation _____ Filter BW _____ MHz Power _____ dBm

Interferer 1: Frequency _____ MHz Bit rate _____ Mb/s Modulation type ____
Peak deviation _____ Filter BW _____ MHz Power _____ dBm

Interferer 2: Frequency _____ MHz Bit rate _____ Mb/s Modulation type ____
Peak deviation _____ Filter BW _____ MHz Power _____ dBm

Power level difference between Victim and Interferers _____ dB

Receiver IF Bandwidth _____ MHz

Victim: Frequency _____ MHz Bit rate _____ Mb/s Modulation type _____
Peak deviation _____ Filter BW _____ MHz Power _____ dBm

Interferer : 1 Frequency _____ MHz Bit rate _____ Mb/s Modulation type _____
Peak deviation _____ Filter BW _____ MHz Power _____ dBm

Interferer 2: Frequency _____ MHz Bit rate _____ Mb/s Modulation type _____
Peak deviation _____ Filter BW _____ MHz Power _____ dBm

Power level difference between Victim and Interferers _____ dB

CHAPTER 5

TEST PROCEDURES FOR DIVERSITY COMBINERS

5.0 General

These tests measure the performance of predetection and postdetection diversity combiners under static and dynamic operating conditions. The static tests include operation with equal and unequal SNRs at the combiner signal inputs. The dynamic tests include operation with equal and unequal average SNRs at the combiner inputs, in-phase and out-of-phase fading, and periodic and random fading. These tests are designed to make the results independent of other components of the system to the maximum extent possible. The criterion for evaluation of combiner performance is measurement of bit error probability (BEP) improvement (or degradation) when signals are combined as compared with single channel operation. The BEP is defined as the ratio of bit errors to the total number of bits transmitted in a given time interval. (For typical results of various tests, see Ashley, C. G. and E. R. Hill, Diversity Combiner Characterization Preliminary Test Report, TP-72-13, Pacific Missile Test Center, Point Mugu, California, 12 April 1972.)

The fading tests with sinusoidal modulation of the phase shifters simulate the signal level variations of specular reflection such as off water and land and the signal level variations of transmitting antenna nulls. The fading tests with Gaussian noise modulation of the phase shifters simulate the signal level variations that occur when the RF signal passes through the flame plasma of a missile.

TABLE 5-1. TEST MATRIX FOR DIVERSITY COMBINERS

Test No.	Test Description
5.1	Diversity combiner static evaluation with equal RF signal strengths
5.2	Diversity combiner static evaluation with unequal RF signal strengths
5.3	Diversity combiner dynamic evaluation with in-phase fading and equal RF signal strengths
5.4	Diversity combiner dynamic evaluation with periodic in-phase fading and unequal RF signal strengths
5.5	Diversity combiner dynamic evaluation with periodic out-of-phase fading and equal RF signal strengths
5.6	Diversity combiner dynamic evaluation with periodic out-of-phase fading and unequal RF signal strengths
5.7	Diversity combiner break frequency test
5.8	Diversity combiner evaluation with random fading
5.9	Predetection combiner band pass frequency response using phase-modulated signal
5.10	Predetection combiner band pass frequency response using unmodulated signal
5.11	Combiner data frequency response test
5.12	Combiner predetection carrier output

5.1 TEST: Diversity Combiner Static Evaluation with Equal RF Signal Strengths

5.1.1 Purpose. This test evaluates the static performance characteristics of a diversity combiner as a component with the two combiner channels weighted equally. This test is the least demanding of diversity combiner tests. If the diversity combiner has difficulty passing this test, it will not likely pass any other tests and may do more harm than good if used in a telemetry receive system.

5.1.2 Test Equipment. An RF signal generator, pulse code modulation (PCM) bit error test set, PCM bit synchronizer, RF attenuators, dual-channel telemetry receiver, RF power meter, dc power supply, dc voltmeter, low-pass filter, and power splitter.

5.1.3 Test Method.

5.1.3.1 Setup.

5.1.3.1.1 Connect the test equipment as shown in Figure 5-1.

5.1.3.1.2. To make the test results independent of characteristics of components in the test setup (other than the combiner under test) to the maximum extent possible, it is desirable to have a common clock signal (hardware synchronizer) to drive both the pseudo-noise test set and the bit synchronizer. The preferred method is to use an external clock source. A variable delay is needed between the clock and the external synchronizer input to the bit synchronizer to ensure that the data bit stream is sampled at the correct time interval. The reason for adjusting the variable delay is to produce the lowest BEP. If the bit synchronizer is not equipped to accept an external synchronizing signal, hardware synchronization may be simulated as shown in Figure 5-1 by using a properly delayed clock signal from the bit synchronizer to drive the test set. The variable delay is needed in this interconnection to cause the clock signals to occur at the correct rate. The clock rate is a function of the delay setting because the test setup comprises a closed loop and the phase lock loop in the bit synchronizer locks up at the specific frequency for each delay. The delay setting is correct when the clock rate matches the rate selected by the front panel controls on the bit synchronizer.

NOTE 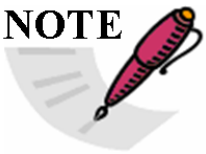	Two single channel receivers can be used to conduct the test rather than the dual channel receiver indicated in the test setup. If single channel receivers are used for predetection combining, it is strongly recommended that the receivers be interconnected so that common (both first and second) local oscillators (LO) are used. For postdetection combining, common LOs are not a requirement**.**

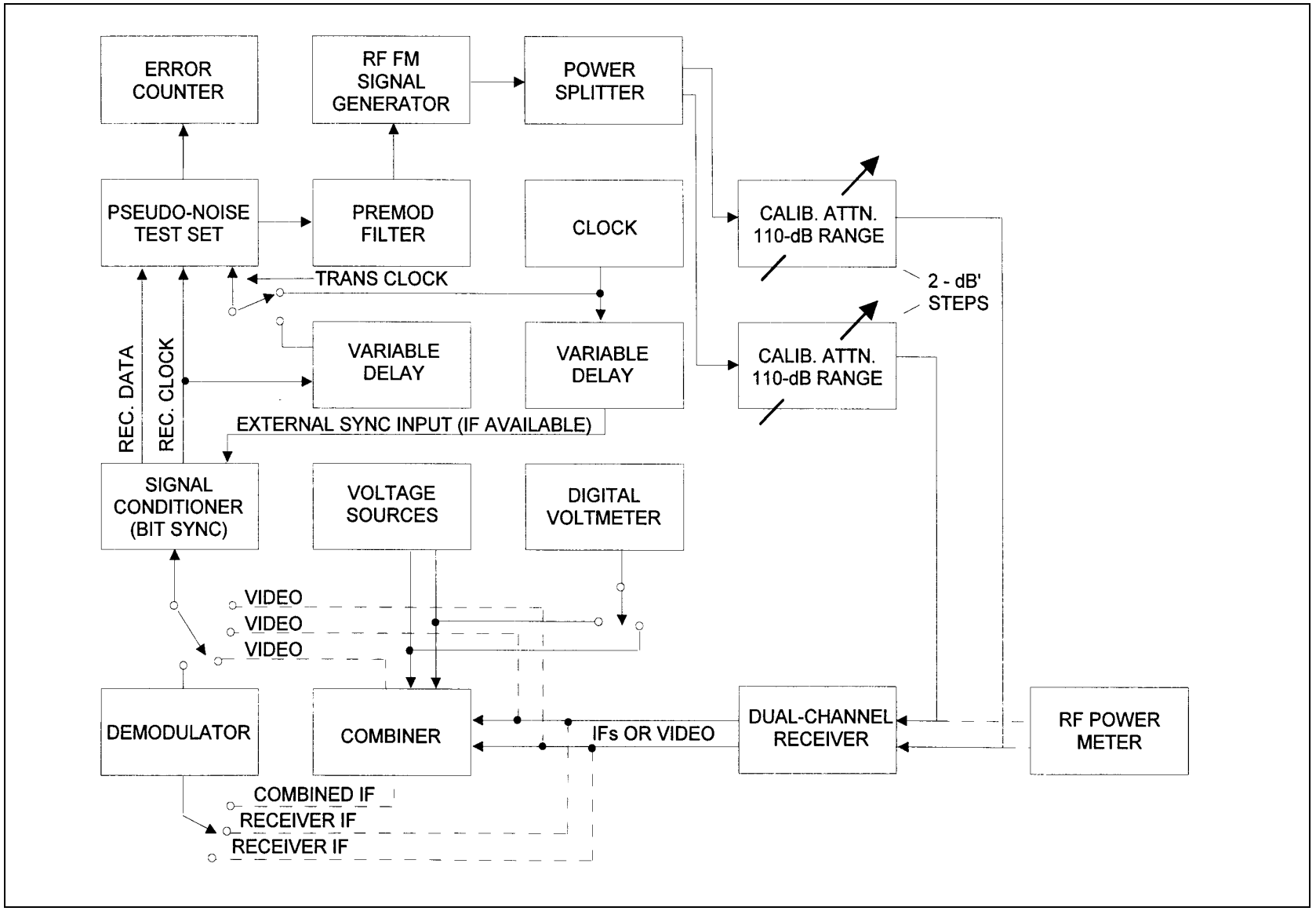

Figure 5-1. Static evaluation test setup for diversity signal combiner (see tests 5.1 and 5.2).

5.1.3.2 Conditions. Tests are conducted by using simulated PCM data formats. Select test conditions that correspond to the conditions under which the combiner will be used.

5.1.3.2.1 Receiver Tuning. Tune the receiver so that the modulated carrier is in the center of the IF passband. Improper tuning can have significant degrading effects on test results. If unusual or inconsistent data is noted during testing, check the tuning.

5.1.3.2.2 Test Equipment Settings.

Signal generator frequency:	Receiver band center frequency
Receiver LOs (first and second):	Common (predetection combining)
Receiver AGC:	ON (fastest time constant)
PN pattern length:	2047 bits

5.1.3.2.3 Single Channel BEP Reference Measurements. A method is needed to make single channel BEP measurements that can be compared with BEP measurements for the combined signals. The bypass method of measurement is recommended provided an external demodulator is available. If an external demodulator is not available, use the alternate method for AGC weighted combiners described in subparagraph 5.1.3.2.3.2.

5.1.3.2.3.1 Bypass Method. In the predetection mode, bypass the combiner and connect the receiver IF signals, one at a time, to an external demodulator. In the postdetection mode, bypass the combiner and connect the receiver video outputs, one at a time, directly to the signal conditioner (bit synchronizer). Connect the external demodulator output to the signal conditioner (bit synchronizer). An external demodulator is needed because the same demodulator is used for both single channel measurements and combined signal measurements and because the demodulator in the receiver is not accessible when combined signal measurements are being made.

5.1.3.2.3.2 Alternate Method. Disconnect both of the receiver AGC input voltages at the combiner. Substitute an external dc voltage source for one of the AGC voltages and leave the other AGC input to the combiner disconnected. The external dc voltage should be adjusted to a level, which corresponds to a strong RF signal for the channel under test. In addition, it may be necessary to disconnect the IF input signal that corresponds to the AGC input that was disconnected.

5.1.3.3 Procedure.

5.1.3.3.1 Record measured data on Data Sheet 5-1.

5.1.3.3.2 Adjust the RF input levels to receiver channels 1 and 2 for approximately –60 dBm at the receiver (calibrated attenuators set to 40 dB). Adjust the combiner according to the manufacturer's instructions.

5.1.3.3.3 Consult the single channel BEP reference measurements described in subparagraph 5.1.3.2.3 and select the method best suited for the combiner under test. Using the selected single

channel BEP measurement method, adjust the calibrated attenuator to reduce the receiver RF input level to channel 1 until the BEP is approximately $1.5 \cdot 10^{-2}$. Similarly, adjust the receiver RF input level to channel 2 until the BEP measured by the error counter is approximately $1.5 \cdot 10^{-2}$.

NOTE 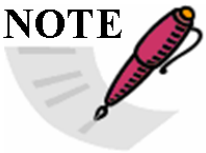	The RF input levels to channels 1 and 2 should not differ by more than 3 dB. If there is a difference, it must be maintained throughout the test to obtain valid data. If the difference is greater than 3 dB, recheck the setup and the receiver tuning adjustments. If the difference is still greater than 3 dB, some attention should be given to repairing or realigning the receiver. The combiner must be aligned so that the channels are weighted equally when the data quality of the channel is the same.

5.1.3.3.4 Determine the appropriate artificial AGC voltages. In preparing to measure the BEP that results from signal combining, appropriate artificial AGC voltages must be supplied to the combiner. Next is an example of how artificial AGC voltages are selected. Assume that the receiver in the test setup develops an AGC of –2 V when the RF input to the receiver is –90 dBm. Also assume that the receiver AGC slope is 50 mV/dB. Thus, the artificial AGC voltage to the combiner should be –2 V when the RF input to the receiver is –90 dBm, –1.90 V when the RF input to the receiver is –92 dBm, –1.80 V when the RF input to the receiver is –94 dBm.

5.1.3.3.5 Adjust the RF input to the receiver and the AGC voltage to the combiner to produce a single channel BEP reading within the range of $1 \cdot 10^{-5}$ to $1 \cdot 10^{-4}$. (This signal level represents a proper signal level with a conveniently measured number of bit errors and serves as a starting point for the measurements following.) Measure and record the BEP for each single channel signal and for the combined channel signal on Data Sheet 5-1. Also record the RF input levels for channels 1 and 2.

5.1.3.3.6 Decrease the RF input levels to the receiver in 2-dB steps and at the same time decrease the AGC voltage to values corresponding to 2 dB step changes in RF input levels (see subparagraph 5.1.3.3.4). Measure and record on Data Sheet 5-1 the single channel BEP, combined channel BEP, and the RF input levels until a single channel BEP range of approximately $1 \cdot 10^{-5}$ to $2 \cdot 10^{-1}$ has been covered.

5.1.3.4 Data Reduction. The BEP at the demodulated output of a predetection combiner at a given RF power level should be less than the BEPs of the single channels at a 2 dB stronger RF power level. If this condition is not true, the combiner and receiver alignment and interconnections should be checked. If everything is correct, the combiner is not working properly. Postdetection combiner performance is a function of modulation but should not be worse than the best single channel.

Data Sheet 5-1	Diversity Combiners				
Test 5.1	**Static, equal RF signal strength**				
Manufacturer:		**Model:**		**Serial No.:**	
Test Personnel:				**Date:**	
Mode: Pre-D:				**Post-D:**	
Single channel measurement technique used:					

AGC	**RF Input Level**		**Bit Error Probability**		
Volts	Channel 1(dBm)	Channel 2(dBm)	Channel 1	Channel 2	Combined

5.2 TEST: Diversity Combiner Static Evaluation with Unequal RF Signal Strengths

5.2.1 Purpose. This test evaluates the static performance characteristics of a diversity combiner with unequal RF signal strengths.

5.2.2 Test Equipment. Refer to subparagraph 5.1.2.

5.2.3 Test Method.

5.2.3.1 Setup. Connect the test equipment as described in subparagraph 5.1.3.1.

5.2.3.2 Conditions. Use the test conditions described in subparagraph 5.1.3.2.

5.2.3.3 Procedure.

5.2.3.3.1 Record measured data on Data Sheets 5-2(1) and 5-2(2).

5.2.3.3.2 Measure the single channel BEP for both channels and the combined signal BEP while the RF input level is held constant at a selected level in one channel and varied over a selected range in the other channel. Repeat these measurements for a total of three selected constant RF input levels. When choosing the constant input levels, examine the data recorded on Data Sheet 5-2(1) and select the three RF input levels and AGC voltages that resulted in single channel BEP readings of approximately $1 \cdot 10^{-5}$, $1.5 \cdot 10^{-2}$, and $2 \cdot 10^{-1}$. These levels will be identified as X, Y, and Z. Data sheets 5-2(1) and 5-2(2) can be used for measurements at levels X, Y, and Z interchangeably by simply deleting two of the letters and entering the selected RF level and AGC voltage on the Data Sheet. The ranges of RF levels and AGC voltages for the variable channel are selected by again examining Data Sheet 5-2(1). The detailed procedures are described next.

5.2.3.3.3 While holding the channel 1-RF input and AGC voltage constant at values corresponding to level X, change the channel 2-RF input level in 2-dB steps over the range shown on Data Sheet 5-2(1) for test 5.2 and change the AGC voltage for each RF step in increments required by the AGC slope of the receiver in the test setup (see subparagraph 5.1.3.3.4 for an example). Following the steps in subparagraphs 5.1.3.3.2 through 5.1.3.3.6, measure channel 1 BEP, channel 2 BEP, the combined BEP, and record the measurements on Data Sheet 5-2(1). Repeat these measurements while holding the channel 1-RF input and AGC voltage at constant values corresponding to levels Y and Z. For each of the selected channel 1-RF input levels (X, Y, or Z), the channel 1 BEP should remain constant and need not be measured each time a channel 2 measurement is made.

However, the channel 1 BEP should be checked occasionally to make sure that the bit error change is not excessive (10 percent of the total bit errors or 20 bit errors, whichever is greater). If the bit error change is excessive, additional warm-up time may be required to allow the signal generator and the receiver to stabilize.

5.2.3.3.4 Repeat the measurement sequence described in subparagraph 5.2.3.3.3 with the channel 2-RF input and AGC voltage held constant at levels X, Y, and Z rather than channel 1. Record the data on Data Sheet 5-2(2).

5.2.3.4 Data Reduction. The BEP at the combiner output should be less than or equal to the BEP of the "best" channel. A 0.5-dB degradation, interpolated from data in test 5.1, is allowable. If this condition is not true, the combiner and receiver alignment and interconnections should be checked. If everything is correct, the combiner is not working properly.

Data Sheet 5-2(1)	Diversity Combiners	
Test 5.2	**Static, unequal RF signal strength**	
Manufacturer:	**Model:**	**Serial No.:**
Test Personnel:		**Date:**
Mode: Pre-D:		**Post-D:**
Single channel measurement technique used:		

RF Input Level and AGC				**Bit Error Probability**		
Channel 1		Channel 2		Channel 1	Channel 2	Channel 3
RF (dBm)	AGC (volts)	RF (dBm)	AGC (volts)			
		X, Y, Z				

Data Sheet 5-2(2)	Diversity Combiners
Test 5.2	**Static, unequal RF signal strength**

Manufacturer:	**Model:**	**Serial No.:**
Test Personnel:		**Date:**
Mode: Pre-D:		**Post-D:**
Single channel measurement technique used:		

RF Input Level and AGC				**Bit Error Probability**		
Channel 1		Channel 2		Channel 1	Channel 2	Combined
RF (dBm)	AGC (volts)	RF (dBm)	AGC (volts)			
↑	↑					
X, Y, Z						
↓	↓					

5.3 TEST: Diversity Combiner Dynamic Evaluation with In-Phase Fading and Equal RF Signal Strengths

5.3.1 Purpose. This test evaluates the dynamic performance characteristics of a diversity signal combiner as a component.

5.3.2 Test Equipment. An RF signal generator, dual channel telemetry receiver, diversity signal simulator, PCM bit error test set, PCM bit synchronizer, RF power meter, and low pass filter.

5.3.3 Test Method.

5.3.3.1 Setup. Connect the test equipment as shown in Figures 5-2 and 5-3. See subparagraph 5.1.3.1.2 for additional setup information.

5.3.3.2 Conditions. Use the test conditions described in subparagraph 5.1.3.2.

5.3.3.3 Procedure.

5.3.3.3.1 Record data on Data Sheet 5-3.

5.3.3.3.2 Connect the power splitter outputs directly to the dual-channel receiver (see Figures 5-2 and 5-3). Adjust the receiver RF input levels to channel 1 and channel 2 for approximately –60 dBm at the receiver (calibrated attenuators set to 40 dB). Tune the receiver and adjust the combiner according to the manufacturer's instructions.

5.3.3.3.3 Reconnect the diversity simulator into the test setup and make the following adjustments to produce signal fades of 20 dB at a rate of 50 fades per second.

NOTE 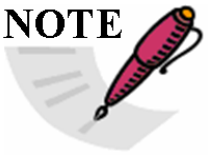	Signal fades are produced by adjusting the simulator (see Figure 5-3) so that the signals at A_1 and B_1 have the proper relative amplitudes and a median phase angle between them of 180°. The same requirements apply to the signals at A_2 and B_2.

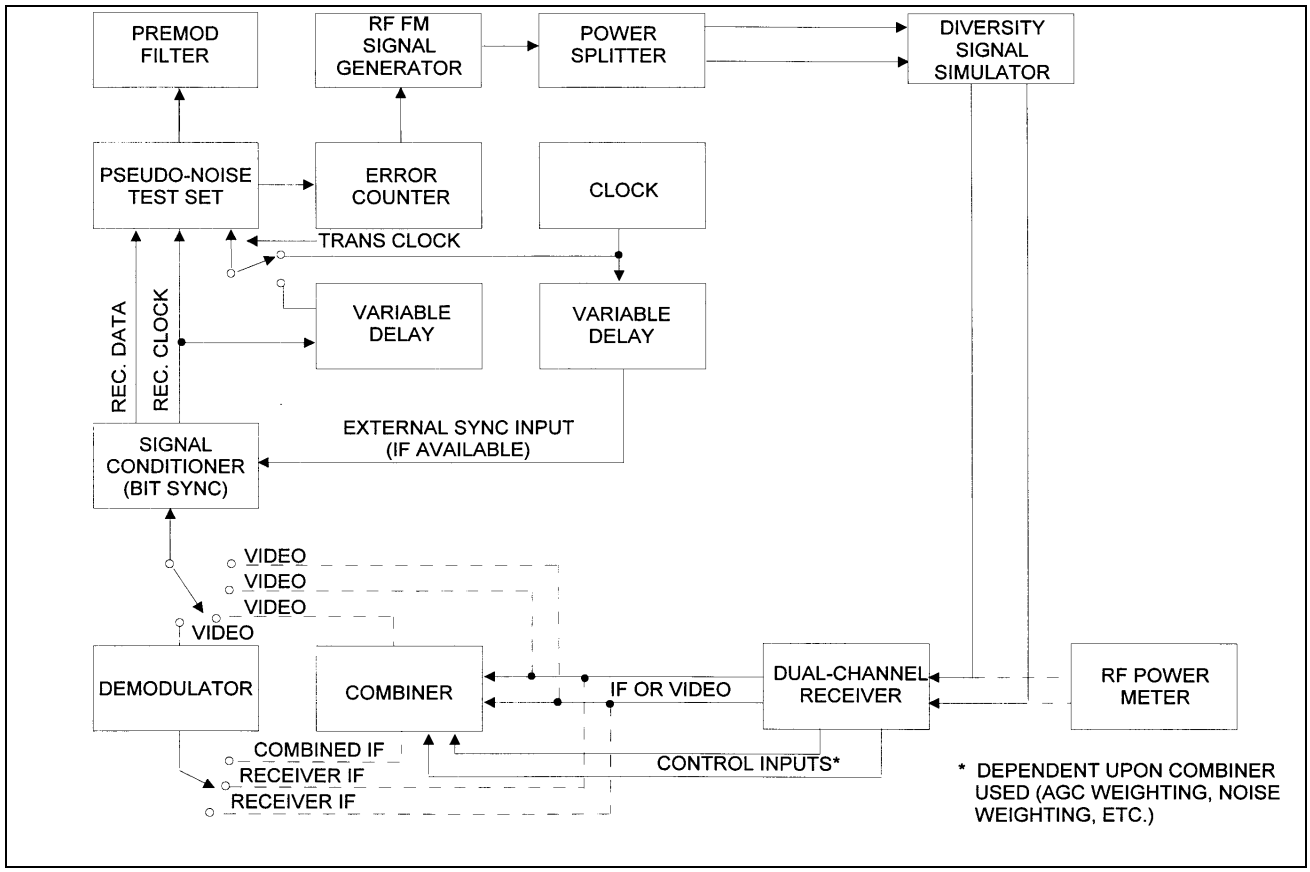

Figure 5-2. Dynamic evaluation test setup for diversity signal combiner (see tests 5.3, 5.4, 5.5, 5.6, 5.7, and 5.8).

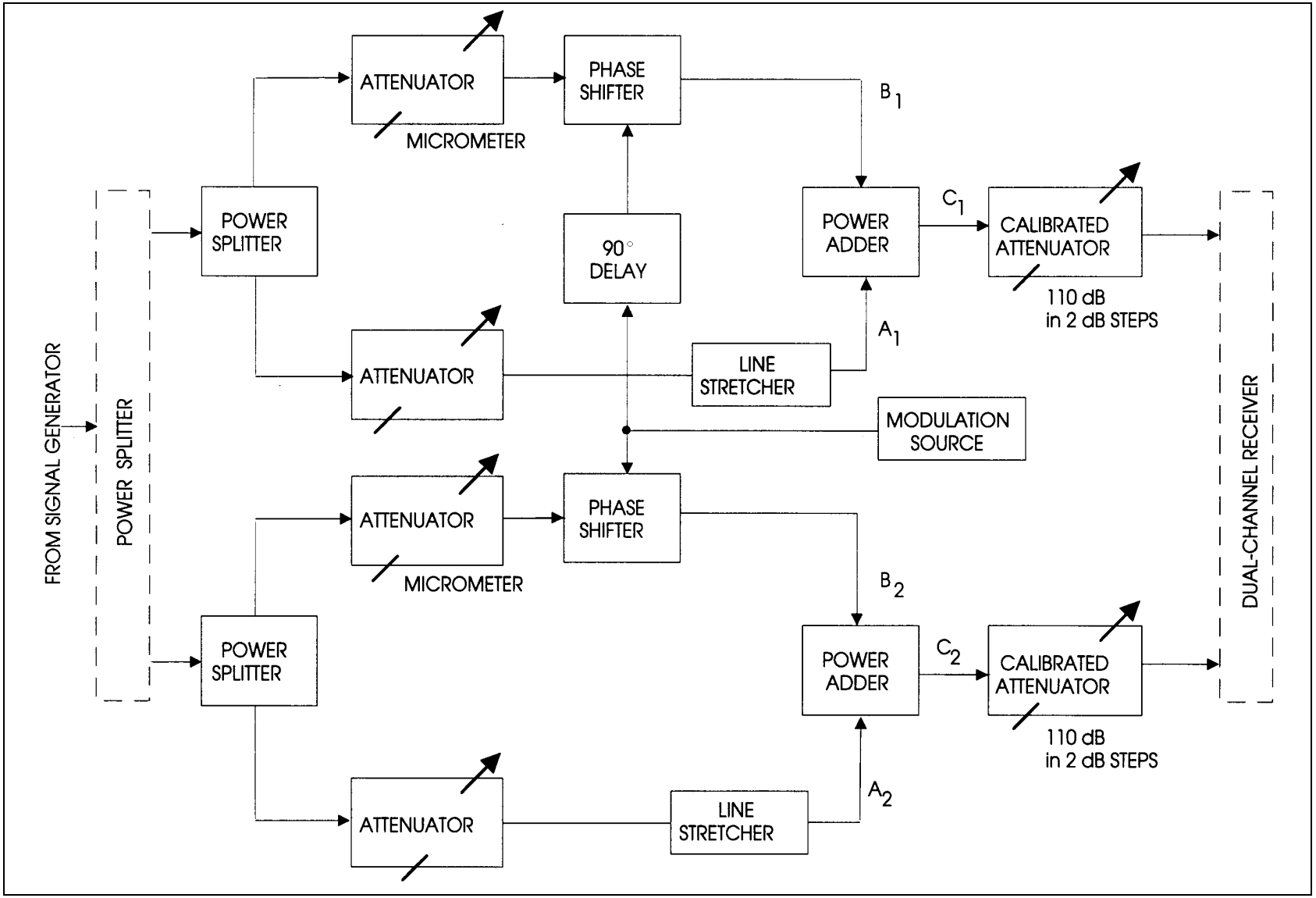

Figure 5-3. Diversity signal simulator (see tests 5.3, 5.4, 5.5, 5.6 and 5.7)

5.3.3.3.4 Select the fastest receiver AGC time constant and adjust the frequency of the phase shifter modulation source in the diversity simulator (Figure 5-3) to 25 Hz. (This setting will produce 50 fades per second.) The modulation waveform should be a sine wave. Connect one input of a dual channel oscilloscope to monitor channel 1 receiver AGC voltage. Connect the other input of the oscilloscope to monitor the phase shifter modulation waveform.

NOTE 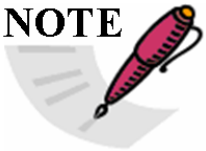	The modulation frequency should be low enough to allow the AGC to track the RF signal fades. If 25 Hz is too high, select a frequency where the product of the AGC time constant (in seconds) and the modulation frequency (in Hz) is equal to or less than 0.01. It should be noted also that phase shifters are normally deviated by a positive voltage only. Therefore, to deviate about a point such as the 180° phase difference between A_1 and B_1, the modulation voltage must include a dc offset. The offset and the modulation voltage amplitude depend on the performance characteristics of the phase shifter and may vary from model to model.

5.3.3.3.5 Remove the 90° delay that is shown in Figure 5-3 between the modulation source and one of the phase shifters. Adjust the line stretcher in path A_1 until the oscilloscope display appears as shown in Figure 5-4. Assuming that the receiver produces a negative going AGC voltage in response to increasing RF signal strength, the important aspect of the adjustment is to ensure that the two negative excursions of the AGC voltage are equal. Nonsymmetry in the horizontal axis reflects the nonlinearity of the phase shifter. This nonlinearity is not highly important unless nonlinearity exceeds a ratio of approximately 2:1, in which case the symmetry can be improved by decreasing the amplitude of the modulation voltage applied to the phase shifters. Next, adjust the micrometer attenuator in line B_1 until the AGC excursion indicates a 20 dB fade depth of the RF signal. It may also be necessary to adjust the attenuator in line A_1. The AGC slope of the receiver must be known to calibrate the oscilloscope. The linear region of the AGC curve should be used in making the calibration.

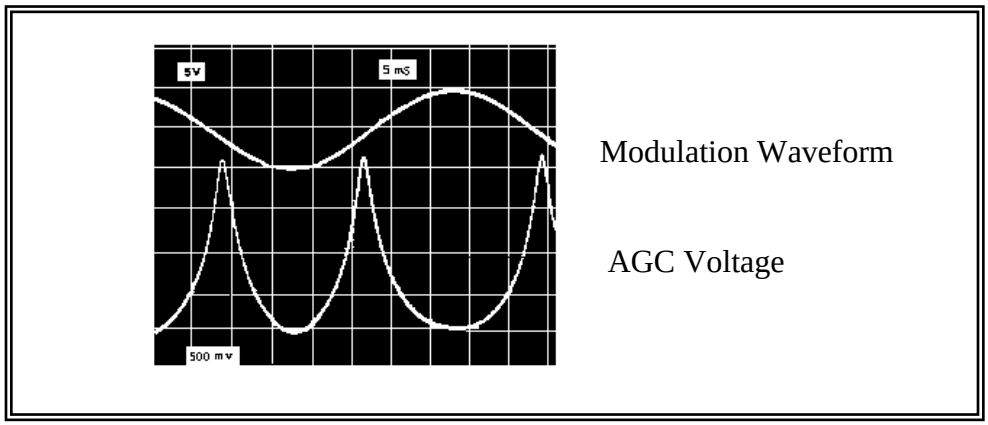

Figure 5-4. Phase-shifter modulation and receiver-AGC voltage (see tests 5.3, 5.4, 5.5, 5.6, and 5.7).

NOTE	The line stretcher in path A_1 and the micrometer attenuator in path B_1 interact. Therefore, several adjustments of the line stretcher and the micrometer attenuator may be required to equalize the AGC voltage excursions and ensure that a 20-dB fade depth is produced

5.3.3.3.6 Repeat subparagraphs 5.3.3.3.4 and 5.3.3.3.5 to make the proper adjustments in lines A_2 and B_2 while observing the channel 2 receiver AGC voltage.

5.3.3.3.7 Connect a dual channel oscilloscope to the two receiver AGC voltages to observe that the signal fading occurs in phase. The 90° delay in the fade simulator is still removed. Consult the single channel BEP measurement methods described in subparagraph 5.1.3.2.3 and select the method best suited for the combiner under test. Using the selected single channel BEP measurement method, make the proper connections to measure the BEP of channel 1. Use the calibrated attenuator to adjust the receiver RF input signal level to channel 1 until the BEP is approximately $1.5 \cdot 10^{-2}$. (A BEP of $1.5 \cdot 10^{-2}$ was selected because it represents enough errors for single channel performance to be readily compared.) Measure and record the BEP and the RF input on Data Sheet 5-3. Repeat for channel 2.

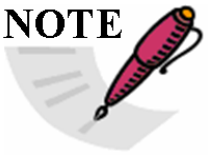	The RF levels required in channels 1 and 2 to produce approximately 1.5 • 10^{-2} BEP should not differ more than 3 dB. If there is a difference, it must be maintained throughout the test to obtain valid data. When the difference is greater than 3 dB, recheck the setup and tuning adjustments. If the difference remains greater than 3 dB, attention should be given to repairing or realigning the receiver.

5.3.3.3.8 After the single channel performance has been suitably equalized (within 3 dB), adjust the RF inputs to produce single channel BEP readings in the range of approximately 1 • 10^{-5} to 1 • 10^{-4}. (This signal level represents a proper signal level with a conveniently measured number of bit errors.) Measure and record the BEP for each single channel and for the combined signal on Data Sheet 5-3. Also measure the RF input levels for channels 1 and 2.

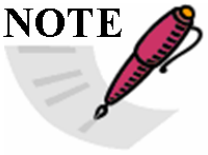	Maintain the RF input level difference observed above.

5.3.3.3.9 Use the calibrated attenuators to decrease the RF input levels to the receiver in 2-dB steps. Measure and record on Data Sheet 5-3 the single channel BEPs, the combined signal BEP, and the RF input levels until a single channel BEP range of approximately 1 • 10^{-5} to 2 • 10^{-1} has been covered.

5.3.3.4 Data Reduction. The BEP at the demodulated output of a postdetection combiner at a given RF power should be less than the BEPs of the single channels at a 2-dB stronger RF power level. If this condition is not true, the combiner and receiver alignment and interconnections should be checked. If everything is correct, the combiner is not working properly. Postdetection combiner performance is a function of modulation but should not be worse than the best single channel.

Data Sheet 5-3	**Diversity Combiners**	
Test 5.3	**Dynamic, equal RF signal strength (in-phase fading)**	
Manufacturer:	**Model:**	**Serial No.:**
Test Personnel:		**Date:**
Mode: Pre-D:		**Post-D:**
Single channel measurement technique used:		

RF Input Level		**Bit Error Probability**		
Channel 1 (dBm)	Channel 2 (dBm)	Channel 1	Channel 2	Combined

5.4 TEST: Diversity Combiner Dynamic Evaluation with Periodic In-Phase Fading and Unequal RF Signal Strengths

5.4.1 Purpose. This test evaluates the dynamic performance of a diversity combiner with periodic in-phase fading and unequal RF signal strengths.

5.4.2 Test Equipment. Refer to subparagraph 5.3.2.

5.4.3 Test Method.

5.4.3.1 Setup. Connect the test equipment as shown in Figures 5-2 and 5-3. See subparagraph 5.1.3.1.2 for additional setup information.

5.4.3.2 Conditions. Use the test conditions described in subparagraph 5.1.3.2.

5.4.3.3 Procedure.

5.4.3.3.1 Record measured data on Data Sheets 5-4(1) and 5-4(2).

5.4.3.3.2 Check or repeat subparagraphs 5.3.3.3.2, 5.3.3.3.3, and 5.3.3.3.4.

5.4.3.3.3 Measure the single channel BEP for both channels and the combined signal BEP while the average RF input level is held constant at a selected level in one channel and varied over a selected range in the other channel. Repeat these measurements for a total of three selected constant RF input levels. In choosing the constant RF input levels, examine the data recorded on Data Sheet 5-3 and select the three average RF input levels that resulted in single channel BEP readings of approximately $1 \cdot 10^{-5}$, $1.5 \cdot 10^{-2}$, and $2 \cdot 10^{-1}$. These levels will be identified as X, Y, and Z. Data sheets 5-4(1) and 5-4(2) can be used for measurements at levels X, Y, and Z interchangeably by simply deleting two of the letters and entering the selected average RF level on the Data Sheet. The ranges of RF levels for the variable channel are selected by again examining Data Sheet 5-3. The detailed procedures follow.

5.4.3.3.4 While holding the channel 1 average RF input constant at level X, vary the channel 2 average RF input level in 2-dB steps over the range shown on Data Sheet 5-3 for test 5.3. Using these procedures, measure channel 1 BEP, channel 2 BEP, and the combined BEP. Repeat the measurement while holding the channel 1 average RF inputs constant at levels Y and Z. For each of the selected channel 1 RF input levels (X, Y, and Z), the channel 1 BEP should remain constant and need not be measured each time a channel 2 BEP measurement is made.

NOTE 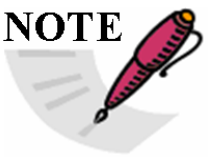	The channel 1 BEP should be checked occasionally to make sure that the drift is not excessive (10 percent of the total bit errors or 20 bit errors, whichever is greater). If the bit error change is excessive, additional warm-up time may be required to allow the signal generator and the receiver to stabilize.

5.4.3.3.5 Repeat the measurement sequence described in subparagraphs 5.4.3.3.3 and 5.4.3.3.4 with the channel 2 average RF input held constant at levels X, Y, and Z rather than channel 1. Record data on Data Sheet 5-4(2).

5.4.3.4 Data Reduction. The BEP at the combiner output should be less than or equal to the BEP of the "best" channel. A 0.5-dB degradation, interpolated from data in test 5.3, is allowable. If this condition is not true, the combiner and receiver alignment and interconnections should be checked. If everything is correct, the combiner is not working properly.

Data Sheet 5-4(1)	Diversity Combiners
Test 5.4	**Dynamic, equal RF signal strength (in-phase fading)**

Manufacturer:	**Model:**	**Serial No.:**
Test Personnel:		**Date:**
Mode: Pre-D:		**Post-D:**
Single channel measurement technique used:		

RF Input Level		**Bit Error Probability**		
Channel 1 RF (dBm)	Channel 2 RF (dBm)	Channel 1	Channel 2	Combined
↑ X, Y, Z				
↓				

Data Sheet 5-4(2)	Diversity Combiners
Test 5.4	**Dynamic, equal RF signal strength (in-phase fading)**

Manufacturer:	**Model:**	**Serial No.:**
Test Personnel:		**Date:**
Mode: Pre-D:		**Post-D:**

Single channel measurement technique used:

RF Input Level		**Bit Error Probability**		
Channel 1 RF (dBm)	Channel 2 RF (dBm)	Channel 1	Channel 2	Combined
	X, Y, Z			

5.5 TEST: Diversity Combiner Dynamic Evaluation with Periodic Out-of-phase Fading and Equal RF Signal Strengths

5.5.1 Purpose. This test evaluates the dynamic performance of a diversity combiner with periodic out-of-phase fading and equal RF signal strengths.

5.5.2 Test Equipment. Refer to subparagraph 5.3.2.

5.5.3 Test Method

5.5.3.1 Setup. Connect the test equipment as shown in Figures 5-2 and 5-3. See subparagraph 5.1.3.1.2 for additional setup information.

5.5.3.2 Conditions. Use the test conditions described in subparagraph 5.1.3.2.

5.5.3.3 Procedure.

5.5.3.3.1 Record data on Data Sheet 5-5.

5.5.3.3.2 Repeat all of subparagraph 5.3.3.3, except in subparagraph 5.3.3.3.5 do not remove the 90° delay in one path of the modulation source. The AGC fade envelopes will then be 180° out of phase.

5.5.3.4 Data Reduction. The BEP at the combiner output should be less than the single channel BEP at an 8-dB stronger RF power level. If this condition is not true, the combiner and receiver alignment and interconnections should be checked. If everything is correct, the combiner is not working properly.

Data Sheet 5-5	Diversity Combiners	
Test 5.5	**Dynamic, equal RF signal strength (out-of-phase fading, 180°)**	
Manufacturer:	**Model:**	**Serial No.:**
Test Personnel:		**Date:**
Mode: Pre-D:		**Post-D:**
Single channel measurement technique used:		

RF Input Level		**Bit Error Probability**		
Channel 1 (dBm)	Channel 2 (dBm)	Channel 1	Channel 2	Combined

5.6 TEST: Diversity Combiner Dynamic Evaluation with Periodic Out-of-Phase Fading and Unequal RF Signal Strengths

5.6.1 Purpose. This test evaluates the dynamic performance of a diversity combiner with periodic out-of-phase fading and unequal RF signal strengths.

5.6.2 Test Equipment. Refer to subparagraph 5.3.2.

5.6.3 Test Method.

5.6.3.1 Setup. Connect the equipment as shown in Figures 5-2 and 5-3. See subparagraph 5.1.3.1.2 for additional setup information.

5.6.3.2 Conditions. Use the test conditions described in subparagraph 5.1.3.2.

5.6.3.3 Procedure.

5.6.3.3.1 Record data on Data Sheets 5-6(1) and 5-6(2).

5.6.3.3.2 Check or repeat subparagraph 5.3.3.3, except in subparagraph 5.3.3.3.5 do not remove the 90° delay in one path of the modulation source. The AGC fade envelopes will then be 180° out of phase.

5.6.3.3.3 Repeat subparagraphs 5.4.3.3.3, 5.4.3.3.4, and 5.4.3.3.5.

5.6.3.4 Data Reduction. The BEP at the demodulated output of a predetection combiner should be less than the BEP of the "best" single channel with a 1-dB weaker RF power level. If this condition is not true, the receiver and combiner alignment and interconnections should be checked. If everything is correct, the combiner is not working properly.

Data Sheet 5-6(1)	**Diversity Combiners**
Test 5.6	**Dynamic, unequal RF signal strength (out-of-phase fading, 180°)**

Manufacturer:	**Model:**	**Serial No.:**
Test Personnel:		**Date:**
Mode: Pre-D:		**Post-D:**
Single channel measurement technique used:		

RF Input Level		**Bit Error Probability**		
Channel 1 RF (dBm)	Channel 2 RF (dBm)	Channel 1	Channel 2	Combined
X, Y, Z				

Data Sheet 5-6(2)	Diversity Combiners
Test 5.6	**Dynamic, unequal RF signal strength (out-of-phase fading, 180°)**

Manufacturer:	**Model:**	**Serial No.:**
Test Personnel:		**Date:**
Mode: Pre-D:		**Post-D:**
Single channel measurement technique used:		

RF Input Level		**Bit Error Probability**		
Channel 1 RF (dBm)	Channel 2 RF (dBm)	Channel 1	Channel 2	Combined
	X, Y, Z			

5.7 TEST: Diversity Combiner Break Frequency

5.7.1 Purpose. This test determines the fading frequency at which the combiner performance starts to degrade significantly. Combiners used in applications where flame or plume attenuation are likely such as missile or launch vehicle tests are subject to very high frequency fade rates.

5.7.2 Test Equipment. Refer to subparagraph 5.3.2.

5.7.3 Test Method.

5.7.3.1 Setup. Connect the test equipment as shown in Figures 5-2 and 5-3. See subparagraph 5.1.3.1.2 for additional setup information.

5.7.3.2 Conditions. Use the test conditions described in subparagraph 5.1.3.2.

5.7.3.3 Procedure.

5.7.3.3.1 Record data on Data Sheet 5-7.

5.7.3.3.2 Adjust the test setup for the equal RF signal strength out-of-phase fading condition as described in test 5.5. Make sure that the delay in one path from the modulation source to the phase shifter is equivalent to a 90° phase shift at each of the fade rates. Set the fade rates as shown on Data Sheet 5-7.

5.7.3.3.3 Use the lowest fading rate shown on the data sheet to adjust the average level of the RF fading signals to give a combined BEP of approximately 10^{-6}. Next, measure the dynamic BEP of the single channels. They should be approximately equal. Slight adjustment of the average RF fading signals or adjustment of the fade depths may be required to make the BEP reading approximately equal.

5.7.3.3.4 Measure the combined BEP for each of the fade rates shown on Data Sheet 5-7. Maintain the 180° out-of-phase condition for each fade rate. Check the single channel BEP occasionally to ensure that it remains approximately constant.

5.7.3.3.5 The combined BEP will increase and a fade rate will be reached when the combined BEP has degraded to $1 \bullet 10^{-4}$. It may be necessary to interpolate between two fade rates. This fade rate is defined as the break frequency.

5.7.3.4 Data Reduction. The break frequency should be high enough to handle the highest fade that will be encountered in an operational environmental.

Data Sheet 5-7	Diversity Combiners
Test 5.7	Dynamic, break frequency

Manufacturer:	Model:	Serial No.:
Test Personnel:		Date:
Mode: Pre-D:		Post-D:
Single channel measurement technique used:		

Average RF Input level		Static BEP		Approximate Dynamic BEP		Fade Rate (fades/ second)	Combined BEP
Channel 1 (dBm)	Channel 2 (dBm)	Channel 1	Channel 2	Channel 1	Channel 2		
		1×10^{-4}	1×10^{-4}			10	
↓	↓	↓	↓			20	
						50	
						100	
						200	
						500	
						1,000	
						2,000	
						5,000	
						10,000	

5.8 TEST: Diversity Combiner Evaluation with Random Fading

5.8.1 Purpose. This test evaluates the dynamic performance of a diversity combiner with random fading.

5.8.2 Test Equipment. Use the equipment listed in subparagraph 5.3.2, plus two Gaussian noise sources.

5.8.3 Test Method

5.8.3.1 Setup. Connect the test equipment as shown in Figures 5-2 and 5-3. See subparagraph 5.1.3.1.2 for additional setup information.

5.8.3.2 Conditions. Use the test conditions described in subparagraph 5.1.3.2.

5.8.3.3 Procedure.

5.8.3.3.1 Setup for 20-dB fading with sinusoidal signals as described in subparagraph 5.3.3.3. Measure the voltages, which cause the peaks and nulls of the AGC to occur. This measurement is done by observing the AGC voltage on an oscilloscope and noting the levels of the peaks and nulls.

5.8.3.3.2 Replace the sinusoid with a dc voltage. Adjust the voltage until the AGC null is observed and measure this voltage. Increase the voltage until the previously noted AGC peak is observed and measure this voltage.

5.8.3.3.3 Set the dc offset into the phase shifter equal to the voltage that gave the AGC peak and also insert a Gaussian noise signal with rms equal to 0.4 times the voltage (peak minus null) measured previously. This setup will produce random fading. The bandwidth of the noise can be changed to produce different fade rates. The amplitude of the noise must be readjusted to keep the rms equal to 0.4 times the voltage (peak minus null) measured previously.

5.8.3.3.4 This procedure is repeated for both channels with independent noise sources. Test 5.5, Test 5.6, and Test 5.7 can be repeated with random fading. The data sheets from those tests can be used to record this data.

	A reasonable range of noise bandwidths is 500 Hz to 50 kHz.

5.8.3.4 Data Reduction. With equal single channel signal strengths, the BEP at the demodulated output of a predetection combiner should be better than the BEPs of the single channels at a 4-dB stronger RF power level. The comments in subparagraphs 5.6.3.4 and 5.7.3.4 apply for unequal signal strengths and break frequency testing.

Data Sheet	5-X	(See Note Below) Diversity Combiners
Test 5.8		Diversity Combiner Evaluation with Random Fading

Manufacturer:	Model:	Serial No.:
Test Personnel:		Date:
Mode: Pre-D:		Post-D:
Single channel measurement technique used:		

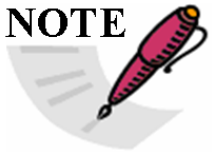

Paragraph 5.8.3.3.4 guidance is repeated here for Test 5.8:

This procedure is repeated for both channels with independent noise sources. Test 5.5, Test 5.6, and Test 5.7 can be repeated with random fading. The data sheets from those tests can be used to record this data.

5.9 TEST: Predetection Combiner Band Pass Frequency Response using Phase-Modulated Signal

5.9.1 Purpose. This test measures the effective predetection band pass bandwidth of the combination of two telemetry receivers and the diversity combiner.

5.9.2 Test Equipment. An RF signal generator with PM capability, sine wave generator, two telemetry receivers (or one dual channel receiver), microwave counter, microwave spectrum analyzer, RF counter, wave analyzer (or spectrum analyzer), and power splitter.

5.9.3 Test Method. This method measures diversity combiner bandwidth using a phase modulated carrier and takes advantage of the principle that the amplitudes of the Bessel sidebands of a PM carrier do not change with the modulating frequency (phase deviation held constant). Additionally, this method is well suited to automated testing; however, it is not recommended for manual testing, but it works for diversity combiners, which do not have MGC.

5.9.3.1 Setup. Connect the test equipment as shown in Figure 5-5.

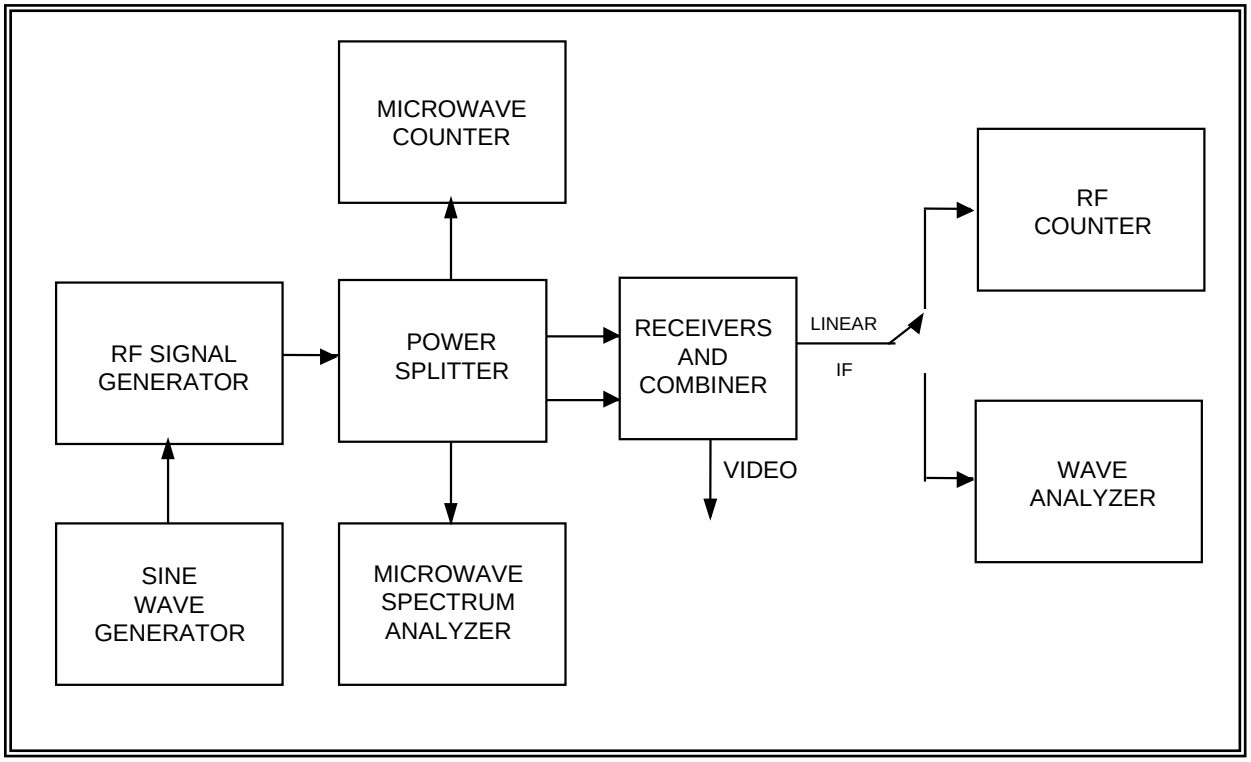

Figure 5-5. Combiner band pass response using phase-modulated signal (see test 5.9).

5.9.3.2 Conditions. The RF signal generator frequency should be set to the receiver center frequency, and the output power should be sufficient to give >30-dB IF SNR or as desired. The IF bandwidth of the telemetry receiver should be set to the widest available value. The wave analyzer (or spectrum analyzer) resolution bandwidth should be set to 3 kHz. For narrow IF bandwidths, use a resolution bandwidth no wider than 0.03 times the diversity combiner IF bandwidth.

5.9.3.3 Procedure.

5.9.3.3.1 The first step in this procedure will be to set the peak phase modulation deviation of the RF signal generator to approximately 82°. This setting can be achieved by adjusting the amplitude of the sine wave generator (frequency = 10 kHz), while monitoring the RF signal using the microwave spectrum analyzer until the carrier component and the first order sidebands are equal in amplitude. (The second order sidebands should be approximately 8 dB lower in amplitude.) Increase the sine wave generator frequency to a value equal to two times the diversity combiner IF bandwidth. Use two times the receiver bandwidth if the combiner bandwidth is unknown. Verify that the carrier component and the first order sidebands are within ±1 dB of each other. If they are not within ±1 dB, the RF generator will not have sufficient bandwidth to perform this test.

NOTE 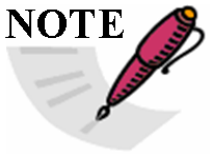	This method will not work if the RF signal generator, telemetry receivers, or diversity combiner under test has excessive incidental phase, frequency modulation, or frequency drift.

5.9.3.3.2 Set the sine wave generator to a frequency equal to 0.05 times the diversity combiner IF bandwidth. Measure and record the amplitudes of the carrier component and both first order sidebands at the diversity combiner linear IF output. Increase the sine wave generator frequency in steps of 0.05 times the diversity combiner IF bandwidth. The maximum frequency will be two times the diversity combiner IF bandwidth. Measure and record the amplitudes of the carrier component and both first order sidebands on Data Sheet 5-9.

5.9.3.4 Data Reduction

5.9.3.4.1 Average the values of the first order sideband amplitudes at a modulation frequency of 0.05 times the IF bandwidth. Subtract this value from the amplitude of the carrier component with this modulating frequency. Use the value as a correction value for all other data points. Subtract the amplitude of the carrier component from each sideband amplitude and add the correction value. Repeat for all modulating frequencies.

5.9.3.4.2 The 3-dB bandwidth of the IF filter can be calculated by finding the input frequencies where the signal was attenuated by slightly more than 3 dB with respect to the signal at center frequency. Perform a linear interpolation between this frequency and the adjacent frequency where the signal was attenuated by slightly less than 3 dB to find the approximate upper and lower 3 dB frequencies. If the signal were attenuated by A_1 dB at frequency f_1 and A_2 dB at frequency f_2, the approximate 3-dB frequency would be:

$$f_1 + \frac{A_1 - 3}{A_1 - A_2}(f_2 - f_1) \qquad \text{(Eq. 5-1)}$$

Let: $f_1 = 10.45$ MHz,
$f_2 = 10.5$ MHz,
$A_1 = 2.2$ dB,
$A_2 = 3.2$ dB,

then: $f_{-3dB} = 10.45 + \{(2.2 - 3)/(2.2 - 3.2)\}\ (10.5 - 10.45) = 10.49$ MHz.

5.9.3.4.3 The composite IF filter equivalent noise power bandwidth with respect to the center frequency can be calculated by dividing the measured power at each frequency by the measured power at the center frequency and then multiplying each of these values by the frequency step size and adding all of these values.

Data Sheet 5-9	Diversity Combiners
Test 5.9	**Predetection combiner band pass frequency response using phase modulated signal**

Combiner Manufacturer:	**Model:**
Serial No.:	
Combiner IF BW: kHz	**Receiver IF BW:** kHz
Test Personnel:	**Date:**

Modulating Frequency (dB)	FC Amplitude (dB)	FC – FM Amplitude (dB)	FC + FM Amplitude (dB)

Upper –3-dB frequency: _____

Lower –3-dB frequency: _____

–3 dB frequency: _____

Equivalent noise power bandwidth: _____

5.10 TEST: Predetection Combiner Band Pass Frequency Response using Unmodulated Signal

5.10.1 Purpose. This test measures the effective predetection band pass bandwidth of the combination of two telemetry receivers and the diversity combiner.

5.10.2 Test Equipment. An RF signal generator, power splitter, two telemetry receivers (or one dual channel receiver), spectrum analyzer (or wave analyzer) with resolution bandwidth ≤3 percent of specified diversity combiner band pass filter bandwidth and effective video bandwidth of ≤1 percent of resolution bandwidth, and oscilloscope camera or plotter for recording spectrum analyzer display.

5.10.3 Test Method. This method measures diversity combiner bandwidth using an unmodulated carrier input signal with an IF signal-to- noise ratio of approximately 10 to 20 dB. This test can be performed with diversity combiners in the AGC mode. It can also be performed on diversity combiners with only a limited IF output. This test is suited for both manual and computer controlled testing.

5.10.3.1 Setup. Connect the test equipment as shown in Figure 5-6.

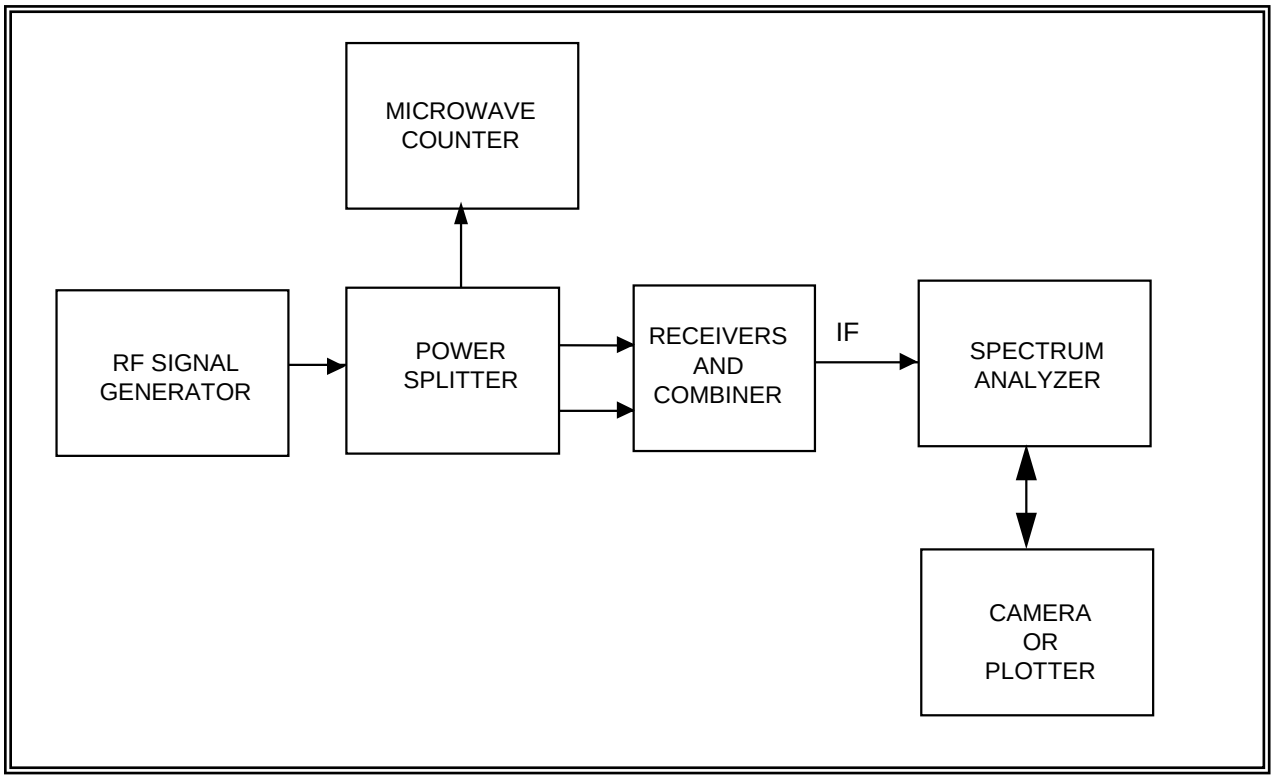

Figure 5-6. Combiner band pass response using unmodulated signal (see test 5.10).

5.10.3.2 Conditions. Set the RF generator frequency to the receiver center frequency. Adjust the RF generator output power to produce a combiner IF SNR of between 10 and 20 dB. The IF bandwidth of the telemetry receiver should be set to the widest available value. Set the spectrum analyzer center frequency to the diversity combiner IF output center frequency. Adjust the spectrum analyzer sweep width to sweep from IF center frequency minus 2.5 times specified IF bandwidth to IF center frequency plus 2.5 times specified IF bandwidth. For a diversity combiner with a 10-MHz IF output and a 1-MHz IF bandwidth, the spectrum analyzer would be set to sweep from 7.5 to 12.5 MHz with a 30-kHz resolution bandwidth and a 300-Hz video bandwidth. If the spectrum analyzer only has certain span settings, use the smallest setting which is greater than or equal to the calculated setting.

5.10.3.3 Procedure. Measure and record the noise spectrum at the diversity combiner IF output. Attach the photograph or plot to the Data Sheet 5-10.

5.10.3.4 Data Reduction. Estimate the gain (loss) at the frequencies listed on Data Sheet 5-10. (Estimate noise power at center frequency not signal power.) Estimate (calculate) the –3-dB bandwidth of the diversity combiner band pass output. Record this value on Data Sheet 5.10.

Data Sheet 5-10	Diversity Combiners
Test 5.10	**Predetection combiner band pass frequency response using unmodulated signal**

Combiner Manufacturer:	**Model:**
Serial No.:	
Combiner IF BW: kHz	**Receiver IF BW:** kHz
Test Personnel:	**Date:**

Frequency	Amplitude (dB)
F_0	
$F_0 – BW/2$	
$F_0 + BW/2$	
$F_0 – BW$	
$F_0 + BW$	
$F_0 – 2\ BW$	
$F_0 + 2\ BW$	

F_0 = IF center frequency BW = IF bandwidth (–3 dB)

Estimated –3-dB bandwidth: _____

5.11 TEST: Combiner Data Frequency Response

5.11.1 Purpose. This test measures the data frequency response of the combination of two telemetry receivers and a diversity combiner. This test can be performed on either a predetection combiner or a postdetection combiner with demodulator.

5.11.2 Test Equipment. Sine wave generator, RF signal generator which can be frequency modulated or phase modulated or both, power splitter, two telemetry receivers (or one dual channel receiver), microwave counter, oscilloscope, wave analyzer, and microwave spectrum analyzer.

5.11.3 Test Method. This test measures data frequency response by measuring the receiver video output level while varying the modulation frequency. The carrier deviation is kept at a constant value.

5.11.3.1 Setup. Connect the test equipment as shown in Figure 5-7

.

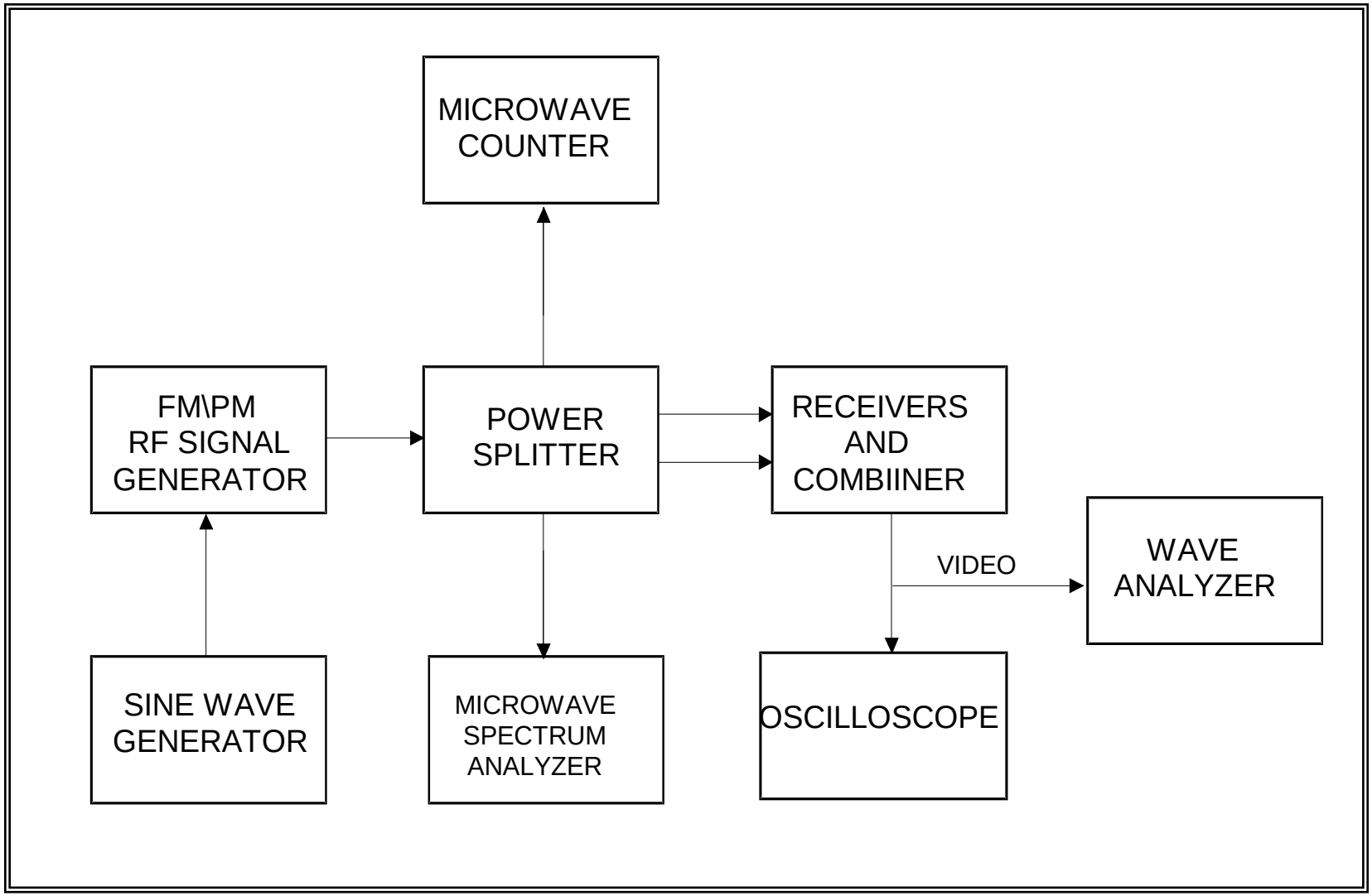

Figure 5-7. Combiner data frequency response (see test 5.11).

5.11.3.2 Conditions. The signal generator should be set to an output frequency equal to the receiver center frequency and an output amplitude sufficient to give >30-dB IF SNR. The diversity combiner video output should be set to approximately 0 Vdc with an unmodulated center frequency input.

5.11.3.3 Procedure.

5.11.3.3.1 The first step in this procedure will be to set the RF signal generator peak deviation. If a diversity combiner with an FM demodulator is being used, set the peak deviation equal to the selected video bandwidth. (The IF bandwidth should be at least twice the video bandwidth.) The peak deviation can be set using Bessel nulls or whatever method the test operator is familiar with. If a diversity combiner with a PM demodulator is being used, set the peak deviation to 82°. Set the sine wave generator frequency to two times the video bandwidth. Measure the difference (in dB) between the modulated carrier amplitude and the amplitudes of the first sideband pair. This difference should be 11.8 dB for frequency modulation (sidebands lower than modulated carrier) and 0 dB for phase modulation. If both sidebands are not between 10.8 and 12.8 dB (±1 dB for phase modulation) lower than the modulated carrier, the frequency response of the signal generator is not adequate for this test, and a different signal generator must be used.

NOTE 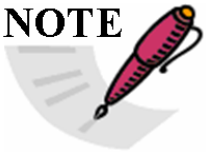	This test can also be performed using a spectrum analyzer with tracking generator in place of the sine wave generator and wave analyzer.

5.11.3.3.2 Set the sine wave generator frequency to one-tenth of the diversity combiner video bandwidth. Maintain the sine wave generator amplitude equal to the value determined in subparagraph 5.11.3.3.1. Measure the output on the wave analyzer and record on Data Sheet 5-11.

5.11.3.3.3 Increase the sine wave generator frequency in steps of one-tenth for the diversity combiner video bandwidth while maintaining the output amplitude constant. The highest sine wave generator frequency will be equal to twice the diversity combiner video bandwidth. Measure and record the video output on Data Sheet 5-11 for each frequency.

5.11.3.4 Data Reduction. Subtract the video output amplitude (in dB) at one-tenth the video bandwidth from the amplitude at each of the other frequencies. Record on Data Sheet 5-11.

Data Sheet 5-11	Diversity Combiners
Test 5.11	**Combiner data frequency response**

Combiner Manufacturer:		**Model:**	
Serial No.:			
Combiner IF BW: kHz		**Receiver IF BW:** kHz	
Combiner video BW: kHz		**Receiver video BW:** kHz	
Combiner type: **Postdetection:**		**Predetection:**	
Demodulator type:	**FM:**	**PM:**	**Other:( )**
Test Personnel:		**Date:**	**Location:**

Video Bandwidth (VBM)	**Frequency**	**Amplitude** (dB)	**Relative Amplitude** (dB)
0.1			
0.2			
0.3			
0.4			
0.5			
0.6			
0.7			
0.8			
0.9			
1.0			
1.1			
1.2			
1.3			
1.4			
1.5			
1.6			
1.7			
1.8			
1.9			
2.0			

5.12 TEST: Combiner Predetection Carrier Output

5.12.1 Purpose. This test measures the amplitude, frequency stability, and accuracy of the diversity combiner predetection carrier output. Output instability and frequency errors could be caused by problems in any of the telemetry receiver or diversity combiner local oscillators.

5.12.2 Test Equipment. Two telemetry receivers (or one dual channel receiver), RF signal generator, microwave counter, counter, true rms voltmeter, power splitter, and wave analyzer (optional).

5.12.3 Test Method. This test measures the amplitude and frequency of the predetection output and is suitable for manual or computer controlled testing. The predetection down converter may be in the diversity combiner or in an external accessory housing.

5.12.3.1 Setup. Connect the test equipment as shown in Figure 5-8.

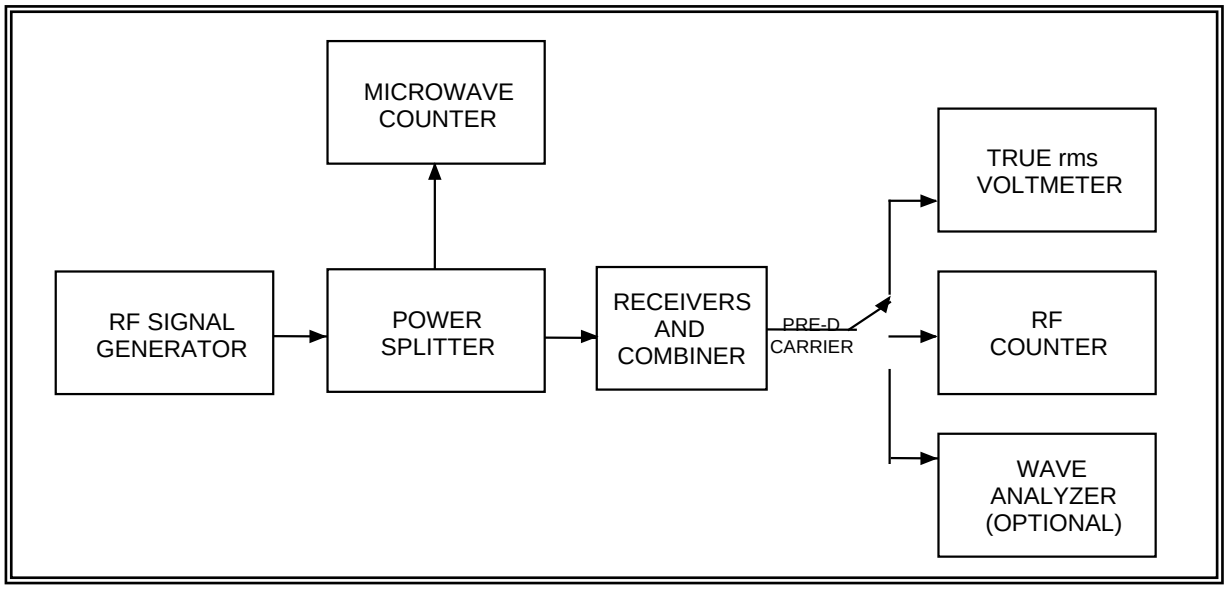

Figure 5-8. Combiner predetection carrier output (see test 5.12).

5.12.3.2 Conditions. The RF signal generator must be stabilized before the test is started. The telemetry receivers and diversity combiner should be on for the specified warm-up time before the start of the test. Set the RF signal generator frequency to the center frequency of the telemetry receiver. Set the RF signal generator output power to –50 dBm.

5.12.3.3 Procedure.

5.12.3.3.1 Select a predetection carrier frequency. Measure the amplitude and frequency of the predetection output. Record these values on Data Sheet 5-12. The frequency at the diversity combiner input shall also be counted and recorded on Data Sheet 5-12.

5.12.3.3.2 Repeat subparagraph 5.12.3.3.1 at 5-minute intervals over a 1-hour time interval. The interval between measurements and the total test time can be varied at the discretion of the test personnel.

5.12.3.3.3 This procedure can be repeated for other predetection carriers as desired.

5.12.3.4 Data Reduction. Record the maximum and minimum frequencies and amplitudes measured. Calculate and record the maximum frequency error (measured frequency – selected frequency).

Data Sheet 5-12	**Diversity Combiners**
Test 5.12	**Combiner predetection carrier output**

Combiner Manufacturer:	**Model:**	
Serial No.:		
Combiner IF BW: kHz	**Receiver IF BW:** kHz	
Test Personnel:	**Date:**	**Location:**
Carrier frequency: kHz		

Combiner Input		**Predetection Output**	
Time	Frequency	Frequency	Amplitude

Maximum frequency:	kHz	
Minimum frequency:	kHz	
Maximum frequency error:	kHz	
Maximum amplitude:	V rms	
Minimum amplitude:	V rms	

CHAPTER 6

TEST PROCEDURES FOR TELEMETRY DOWNCONVERTERS

6.0 General

This chapter describes the test procedures used to measure the parameters of telemetry downconverters. Included are methods for determining 1-dB gain compression, saturation level, bandwidth, small signal power gain, intermodulation (IM) products, intercept point (IP), VSWR, noise figure, channel isolation, spurious signal generation, image rejection, and local oscillator frequency accuracy. These tests are generally performed under laboratory conditions. If, however, the downconverter is to be used under adverse conditions, testing should be accomplished whenever possible under conditions close to those expected during normal operation.

Table 6.1 lists the types of tests and their test and paragraph number:

TABLE 6-1.
TEST MATRIX FOR TELEMETRY DOWNCONVERTERS

Test Number	Test Description
6.1	Gain compression and saturation level
6.2	Bandwidth and passband gain characteristics
6.3	Intermodulation products and intercept point
6.4	Voltage standing wave ratio
6.5	Noise figure
6.6	Channel isolation
6.7	Spurious signal
6.8	Image rejection
6.9	Local oscillator frequency accuracy and stability
6.10	Local oscillator radiation

6.1 TEST: Gain Compression and Saturation Level

6.1.1 Purpose. This test measures the 1-dB gain compression point and the saturation level. These tests are important in determining the maximum input signal levels the downconverter can handle without causing distortion of the signal. The 1-dB gain compression point is defined as the point where the gain of a downconverter has decreased 1 dB from the small signal gain. The saturation level is the maximum output level.

6.1.2 Test Equipment. Signal generator, spectrum analyzer, two power meters, power splitter, and terminations (characteristic impedance).

6.1.3 Test Method. This test measures the input and output power levels while increasing the input power level.

6.1.3.1 Setup. Connect the test equipment as shown in Figure 6-1. Unused downconverter inputs and outputs should be terminated in their characteristic impedance. If the downconverter is a dual channel unit, this test should be performed on both channels.

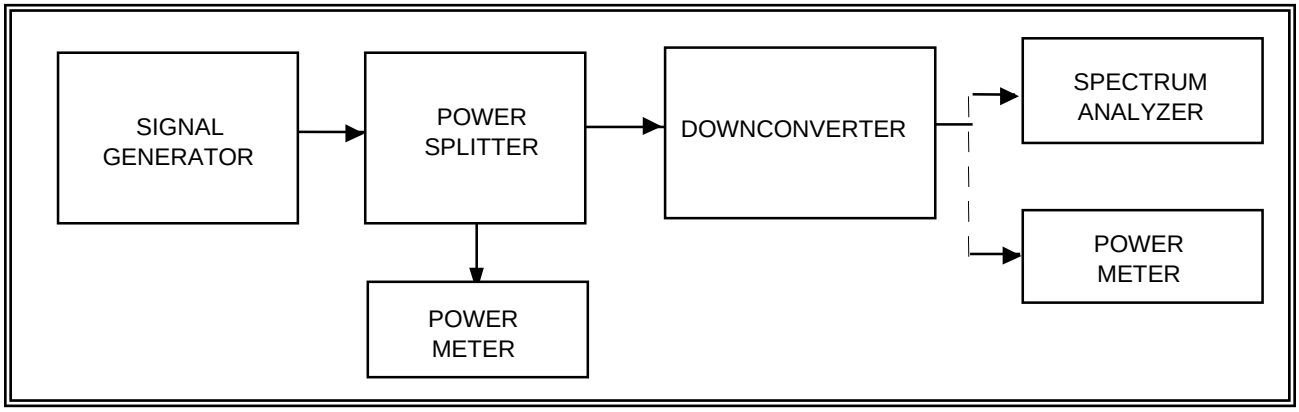

Figure 6-1. Downconverter gain compression and saturation level test setup (see test 6.1).

6.1.3.2 Conditions. Perform this test under laboratory conditions after the specified warm-up time. All procedures are conducted with continuous wave signals (unmodulated) into the device under test. Set the frequency of the signal generator to the center frequency of the downconverter under test.

6.1.3.3 Procedure.

6.1.3.3.1 Set the generator output level to a value 30 dB below the specified 1-dB gain compression input level of the downconverter. Monitor the output using the spectrum analyzer to verify that no significant spurious signals are present at the downconverter output. If large spurious signals are present, the downconverter may not be usable until the problem is corrected. However, gain compression can be measured by using the spectrum analyzer instead of the power meter to detect output power at desired frequency. The rest of this procedure will assume that no significant spurious signals are present.

6.1.3.3.2 Connect the power meter to the downconverter output. Measure and record the input and output power levels (in dBm) on Data Sheet 6-1. The difference between the output and input levels is the small signal gain at center frequency.

6.1.3.3.3 Increase the input power until the difference between the input and output powers is 1 dB less than the small signal gain measured in subparagraph 6.1.3.3.2. Record the input and output powers on Data Sheet 6-1.

6.1.3.3.4 Increase the input power until the output level peaks. Find the smallest input signal level which gives this output level. Record the input and output levels on Data Sheet 6-1.

6.1.3.4 Data Reduction. Compare the measured values with the specified values.

Data Sheet 6-1	Telemetry Downconverters
Test 6.1	Gain compression and saturation level

Downconverter Manufacturer:	Model:
Serial No.:	

Test Personnel:	Date:	Location:

Input frequency: _____ MHz

Output frequency: _____ MHz

Small signal

Input power: _____ dBm

Output power: _____ dBm

Gain _____ dB

1 dB gain compression

Input power: _____ dBm

Output power: _____ dBm

Gain _____ dB

Saturation level

Input power: _____ dBm

Output power: _____ dBm

6.2 TEST: Bandwidth and Passband Gain Characteristics

6.2.1 Purpose. This test measures the passband gain characteristics. Bandwidth is defined as the maximum range of frequencies over which the amplitude response does not decrease more than 3 dB from the reference point. These tests ensure that the downconverter will operate properly over the intended frequency band and that the downconverters gain performance will be fairly uniform across the band.

6.2.2 Test Equipment. Signal generator, spectrum analyzer, two power meters, power splitter, and terminations (characteristic impedance).

6.2.3 Test Method. This test measures the input and output power levels while the input frequency is varied.

6.2.3.1 Setup. Connect the test equipment as shown in Figure 6-2. Unused downconverter inputs and outputs should be terminated in their characteristic impedance. If the downconverter is a dual channel unit, this test should be performed on both channels.

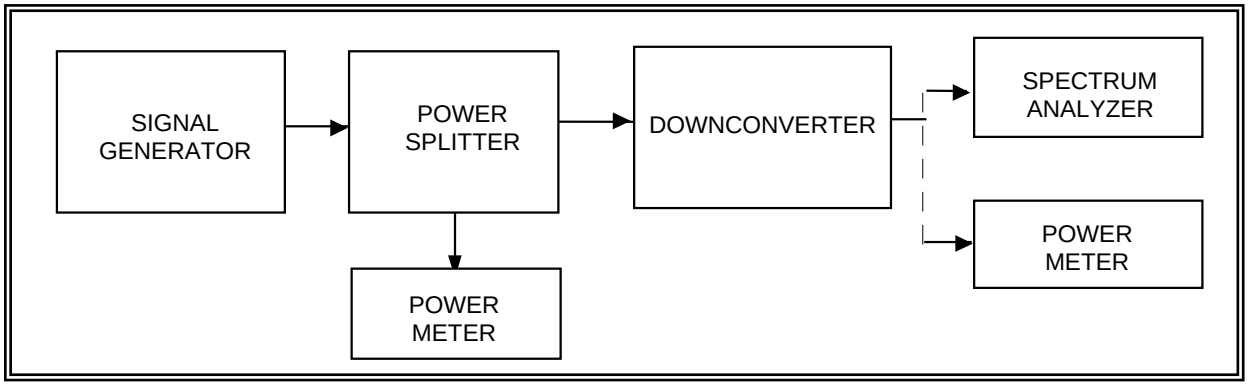

Figure 6-2. Downconverter bandwidth and passband gain characteristics (see test 6.2).

6.2.3.2 Conditions. Perform this test under laboratory conditions after the specified warm-up time. All procedures are conducted with continuous wave signals (unmodulated) into the device under test.

6.2.3.3 Procedure.

6.2.3.3.1 Set the signal generator frequency to the center of the passband of the device under test. Set the signal generator level to a value 20 dB below the 1-dB gain compression input level measured in test 6.1. Measure the input and output power levels. The output power levels can be measured using either the power meter or spectrum analyzer. Record on Data Sheet 6-2.

6.2.3.3.2 Set the signal generator frequency to the lowest frequency in the specified band pass. Measure the input and output power levels and record on Data Sheet 6-2.

6.2.3.3.3 Set the signal generator frequency to the highest frequency in the specified band pass. Measure the input and output powers and record on Data Sheet 6-2.

6.2.3.3.4 Tune the signal generator across the band of interest. Note and record any abnormal changes in gain versus frequency on Data Sheet 6-2. Continue tuning until response drops approximately 10 dB to ensure that the actual downconverter band edges have been reached. Retune the signal generator and record the -3-dB points (relative to center frequency gain) on Data Sheet 6-2.

6.2.3.3.5 This test can also be performed using a sweep generator and network analyzer or a wide band noise source and a spectrum analyzer in place of the signal generator and output power meter.

6.2.3.4 Data Reduction. Calculate the gain by subtracting the input power from the output power. Record on Data Sheet 6-2 in the gain column.

Data Sheet 6-2	Telemetry Downconverters
Test 6.2	Bandwidth and passband gain characteristic

Downconverter Manufacturer:	Model:
Serial No.:	

Test Personnel:	Date:	Location:

	Input	**Output**	**Gain**
Center frequency (per specification)	MHz	MHz	
	dBm	dBm	dB
Lowest frequency (per specification)	MHz	MHz	
	dBm	dBm	dB
Highest frequency (per specification)	MHz	MHz	
	dBm	dBm	dB
Low –3-dB frequency	MHz	MHz	dB
	dBm	dBm	
High –3-dB frequency	MHz	MHz	dB
	dBm	dBm	

6.3 TEST: Intermodulation Products and Intercept Point

6.3.1 Purpose. This test measures the intermodulation (IM) products and intercept point (IP) of a downconverter. These tests determine a downconverter's ability to operate properly in the presence of multiple input signals. Multiple high-level input signals, as can be found in many "RF-rich" environments, can create situations in which interfering signals are generated internal to the downconverter. Intermodulation products and intercept point are discussed in more detail in Appendix A.

6.3.2 Test Equipment. Two signal generators, two isolators or 10-dB attenuators (20 dB if resistive combiner used), power combiner, spectrum analyzer, and terminations (characteristic impedance).

6.3.3 Test Method. Two RF signals are summed and applied to the downconverter input. The output spectrum is measured. The third-order intercept point is calculated from the relative amplitudes of the fundamental and third-order outputs.

6.3.3.1 Setup. Connect the test equipment as shown in Figure 6-3.

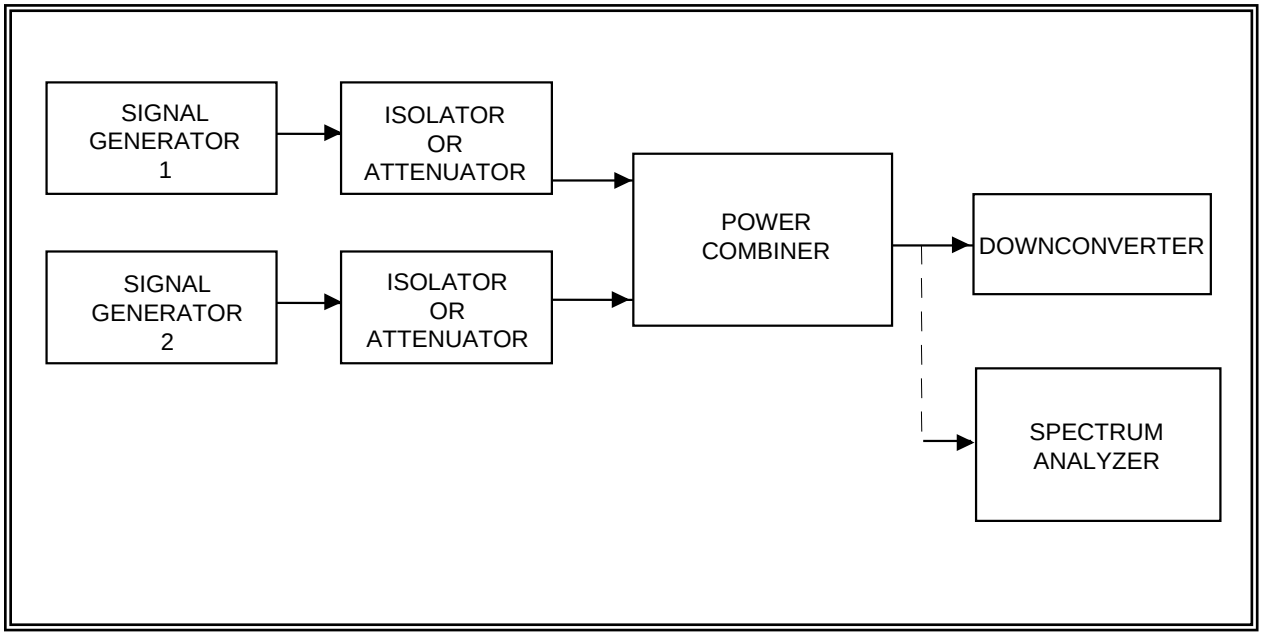

Figure 6-3. Intermodulation products and intercept point test setup (see test 6.3).

6.3.3.2 Conditions. Perform this test under laboratory conditions after the specified warm-up time. All procedures are conducted with continuous wave signals (unmodulated) into the device under test. The isolators (or attenuators) between the signal generators and power combiner provide isolation between the generators to minimize interference between the generators. Spurious outputs or incidental phase modulation may degrade the accuracy of the results of this test. All unused downconverter signal inputs and outputs should be terminated in their characteristic impedance.

6.3.3.3 Procedure.

6.3.3.3.1 Set the frequencies of the fundamental signals (f_{i1} and f_{i2}) near the mid-band frequency of the downconverter under test. The spacing of the fundamental signals is not critical as long as the third-order products are within the downconverter passband; that is, $2f_1 - f_2$ and $2f_2 - f_1$ must be within the downconverter bandwidth.

6.3.3.3.2 Set the output level of each signal generator to a convenient reference level, for example, –50 dBm. Connect the spectrum analyzer to the power combiner output and observe the spectrum. Adjust the display width to include the two fundamentals and the two third-order IM products as shown in Figure 6-4. Only signals at frequencies f_{i1} and f_{i2} should appear. Increase the output power of both signal generators in 10-dB steps until the amplitude of each signal is –20 dBm (or at least 10 dB below the 1-dB compression level measured in test 6.1) as measured on the spectrum analyzer. The signals should increase in 10-dB steps, and no extraneous signals should be present. This technique ensures that IM products are not being produced in the power combiner or spectrum analyzer.

NOTE 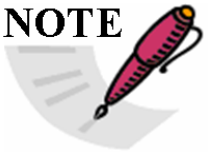	Spectrum analyzers may produce intermodulation products when a high-level signal is applied to the input. If intermodulation products occur, attenuate the signal at the input to the spectrum analyzer. Most analyzers have a built-in attenuator.

6.3.3.3.3 Reconnect the downconverter between the power combiner and the spectrum analyzer. With the power at the input of the downconverter at –20 dBm (or other input level at least 10 dB below 1-dB compression level), measure and record on Data Sheet 6-3 the power levels at frequencies of f_1, f_2, $2f_1 - f_2$, and $2f_2 - f_1$.

6.3.3.3.4 Reduce both input power levels to the downconverter in 10-dB steps. Measure and record on Data Sheet 6-3 the power levels at frequencies of f_1, f_2, $2f_1 - f_2$, and $2f_2 - f_1$. Continue to reduce the input power levels until the third-order IM products decrease to the noise floor.

6.3.3.4 Data Reduction. The third-order intercept point can be calculated using (all values in dBm):

$$IP_{o3} = \frac{3}{2} P_o - \frac{IM_{o3}}{2} \qquad \text{(Eq. 6-1)}$$

Where: IP_{o3} = the calculated output power at which the power of the third-order intermodulation product is equal to the power of the fundamental signal

P_o = measured fundamental output power (higher of two measured values)

IM_{o3} = measured third-order intermodulation power (higher value)

The calculated third-order intercept point (IP_{o3}) should be similar for each input power level. As discussed in Appendix A, the third-order intercept point can be used to estimate the intermodulation power for any pair of input signals of equal amplitude and can also be used to calculate the spurious free dynamic range. The third-order intercept point will usually be approximately 10 dB higher than the 1-dB gain compression point output power (see test 6.1).

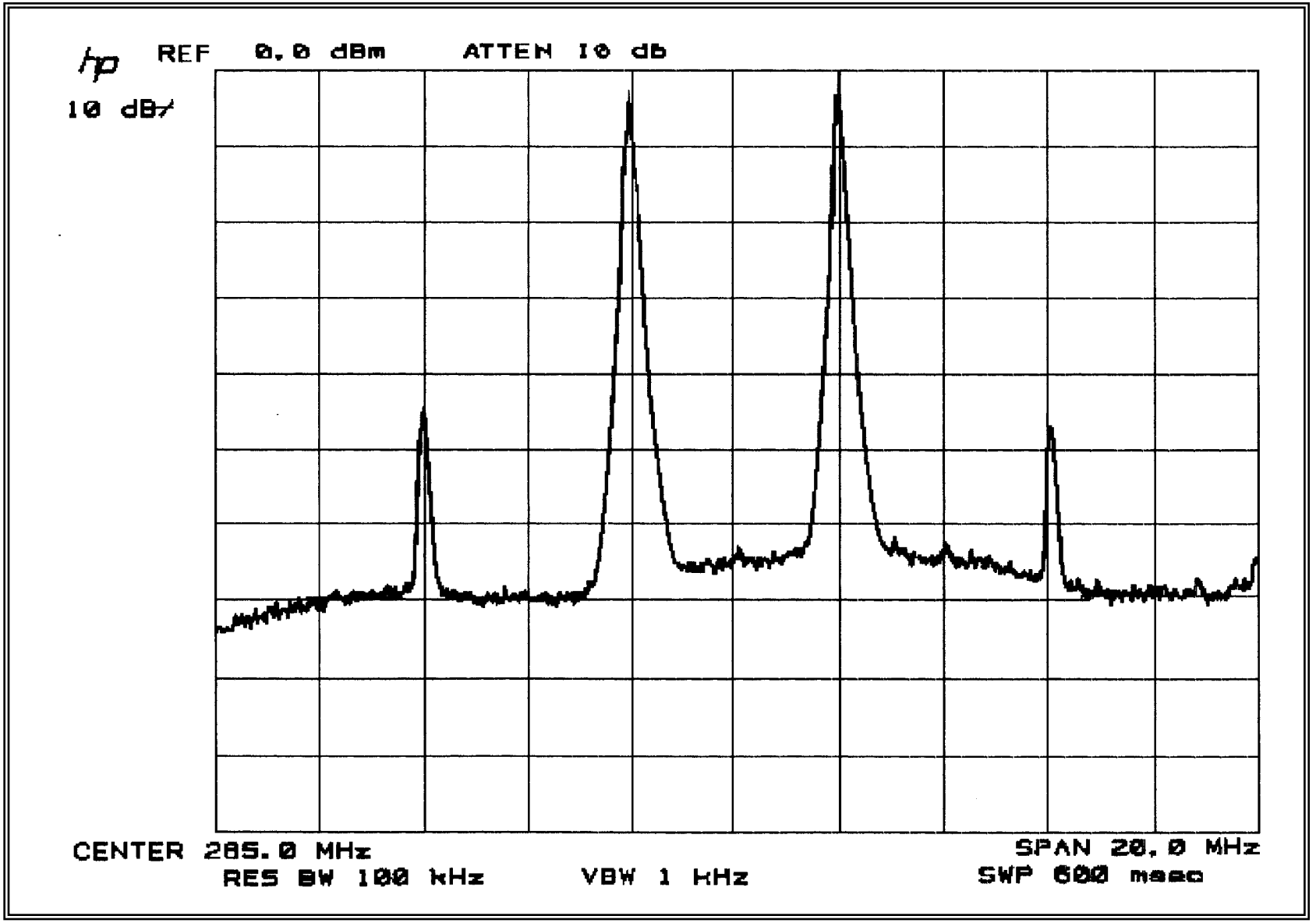

Figure 6-4. Downconverter intermodulation products (see test 6.3).

Data Sheet 6-3	Telemetry Downconverters
Test 6.3	Intermodulation products and intercept point

Downconverter Manufacturer:	Model:
Serial No.:	
Test Personnel:	Date: Location:

FREQUENCY

Input	**Output**
f_{i1} _____ MHz	f_1 _____ MHz
f_{i2} _____ MHz	f_2 _____ MHz
	$2f_1 - f_2$ _____ MHz
	$2f_2 - f_1$ _____ MHz

Power (dBm)

Inputs		**Outputs**				
f_{i1}	f_{i2}	f_1	f_2	$2f_1 - f_2$	$2f_2 - f_1$	IP_{o3}

6.4 TEST: Voltage Standing Wave Ratio

6.4.1 Purpose. This test determines the quality of the impedance match of the device under test by measuring the voltage standing wave ratio (VSWR). Reflections of the signal, caused by an impedance mismatch, can result in distortion of the signal and a reduction in signal power.

6.4.2 Test Equipment. Sweep generator, standing wave ratio (SWR) test set, network analyzer, terminations (characteristic impedance), and RF short.

6.4.3 Test Method. This test measures VSWR using a network analyzer. See tests 2.4 and 3.4 for alternate method using a spectrum analyzer.

6.4.3.1 Setup. Connect the test equipment as shown in Figure 6-5.

6.4.3.2 Conditions. Perform this test under laboratory conditions after the specified warm-up time. All procedures are conducted with CW signals (unmodulated) into the device under test. Follow procedures recommended in network analyzer operating manual.

6.4.3.3 Procedure.

6.4.3.3.1 Set the sweep generator frequency to the sweep across the passband of the downconverter under test and adjust the calibrated attenuator for a level of about –40 dBm into the SWR test set.

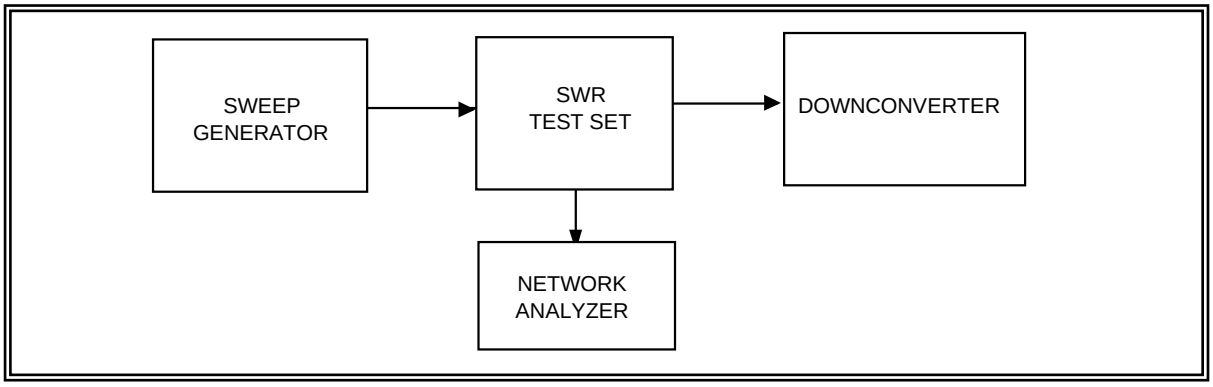

Figure 6-5. Downconverter VSWR test setup (see test 6.4).

6.4.3.3.2 Connect the short circuit termination to the SWR test set and establish a convenient reference level on the network analyzer. A 0-dB reference is very convenient to use with the network analyzer set for a log display.

6.4.3.3.3 Remove the short circuit termination and connect the downconverter input to the SWR test set. Terminate the downconverter output port with its characteristic impedance. Observe the signal level on the network analyzer. The difference between the reference level established in subparagraph 6.4.3.3.2 and the new level in dB is the return loss.

6.4.3.3.4 Record the return loss in dB at convenient increments across the band on Data Sheet 6-4. Note and record any abnormal changes in return loss versus frequency as the generator is tuned.

6.4.3.3.5 Reverse the downconverter connection in the test setup and repeat subparagraphs 6.4.3.3.2 through 6.4.3.3.4 (using output frequency passband) to obtain the downconverter output return loss.

6.4.3.4 Data Reduction. The VSWR can be calculated from the return loss using the following equation:

$$L_R = 20\log\left(\frac{1}{\rho}\right) \qquad \text{(Eq. 6-2)}$$

$$\rho = \frac{1}{anti\log\left(L_R / 20\right)}$$

$$VSWR = \frac{1+\rho}{1-\rho}$$

Where:

L_R = *return loss measured*

ρ = *reflection coefficient of load being measured*

Note: See page 3-21, Table 3-2: Return loss to equivalent VSWR.

Data Sheet 6-4	Telemetry Downconverters
Test 6.4	Voltage standing wave ratio

Downconverter Manufacturer:	Model:
Serial No.:	
Test Personnel:	Date: Location:

Frequency (MHz)	**Return Loss** (dB)	**VSWR**

6.5 TEST: Noise Figure

6.5.1 Purpose. This test measures the noise figure which is the ratio of the input signal to noise divided by the output signal to noise expressed in dB. See Appendix B for a discussion of noise figure. The noise figure of a device is a measure of how much noise is added to the signal by that device. The lower the noise figure, the better the device.

6.5.2 Test Equipment. Noise figure meter, noise source, and terminations (characteristic impedance).

6.5.3 Test Method. This test measures noise figure using a calibrated noise source and an automatic noise figure meter.

6.5.3.1 Setup. Connect the test equipment as shown in Figure 6-6.

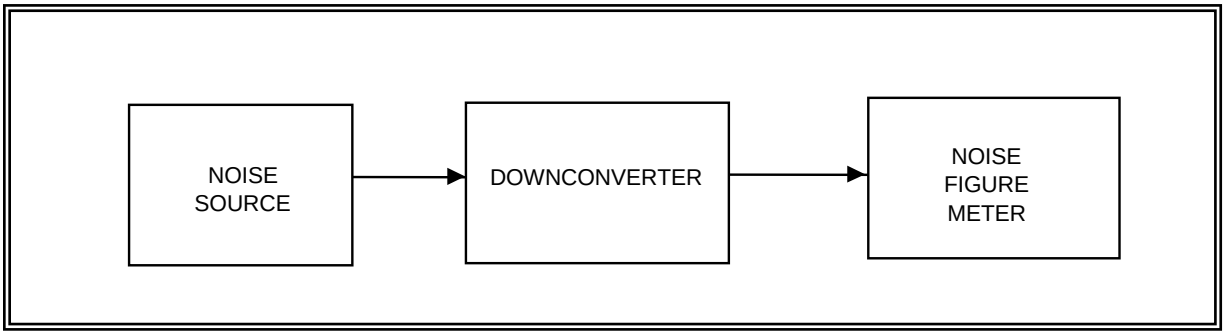

Figure 6-6. Downconverter noise figure test setup (see test 6.5).

6.5.3.2 Conditions. Perform this test under laboratory conditions after the specified warm-up time. Carefully follow operating procedures and cautions in noise figure manual. If possible, this test should be conducted with an automatic noise figure meter in the fixed external local oscillator with variable frequency IF mode. See tests 2.5, 2.6, 3.5, or 4.2 for alternate test configurations if this type of meter is not available.

	Field effect transistor amplifiers can be damaged by noise spikes.

6.5.3.3 Procedure.

6.5.3.3.1 Configure noise figure meter to operate in fixed external local oscillator with variable frequency IF mode. Calibrate noise figure meter using method recommended in the manual.

6.5.3.3.2 Reconnect test equipment as shown in Figure 6-6. Measure the noise figure in 10-MHz steps by varying the measurement frequency of the noise figure meter. Record these values on Data Sheet 6-5.

6.5.3.3.3 Find the maximum noise figure by sweeping the measurement frequency across the band in 1-MHz steps. Record the frequency and noise figure on Data Sheet 6-5.

6.5.3.4 Data Reduction. Compare the measured values to the specification.

Data Sheet 6-5	Telemetry Downconverters
Test 6.5	Noise figure

Downconverter Manufacturer:	Model:
Serial No.:	
Test Personnel:	Date:	Location:

Measurement Frequency (MHz)	Noise Figure (dB)

6.6 TEST: Channel Isolation

6.6.1 Purpose. This test measures the isolation in dB between channels of a dual channel downconverter. Omit this procedure when testing single channel downconverters. A dual channel downconverter is one in which two RF channels, usually housed in a single chassis, are downconverted using a common local oscillator. Good isolation is necessary to ensure negligible crosstalk between channels of the downconverter.

6.6.2 Test Equipment. Signal generator, spectrum analyzer, and terminations (characteristic impedance).

6.6.3 Test Method. This test measures the isolation between two downconverter channels by applying a large signal to one channel and monitoring the other channel.

6.6.3.1 Setup. Connect the test equipment as shown in Figure 6-7.

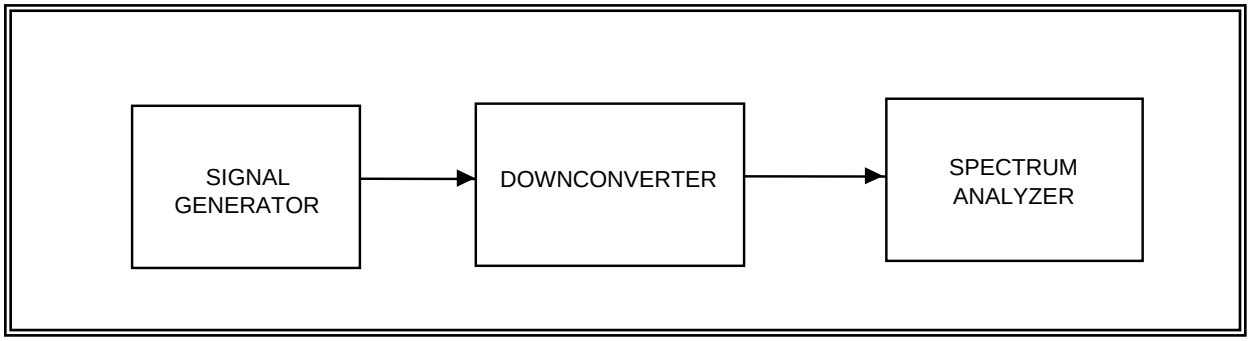

Figure 6-7. Downconverter channel isolation test setup (see test 6.6).

6.6.3.2 Conditions. Perform this test under laboratory conditions after the warm-up time of at least 30 minutes.

6.6.3.3 Procedure.

6.6.3.3.1 Set the signal generator frequency to the center of the passband and set the generator output level to the maximum specified input level of the downconverter. Set the spectrum analyzer center frequency equal to the signal generator frequency. Measure the generator output signal power using the spectrum analyzer and record on Data Sheet 6-6.

6.6.3.3.2 Connect the signal generator to the channel 1 input port. Connect the spectrum analyzer to the input of channel 2 and terminate the channel 1 and 2 outputs in their characteristic impedance. Measure the signal power (if discernible) at the channel 2 input and record on Data Sheet 6-6.

6.6.3.3.3 Connect the spectrum analyzer to the channel 1 output port and adjust the analyzer center frequency to be equal to the downconverter output frequency. Terminate the channel 2 input and output in their characteristic impedance. Measure the signal power at the channel 1 output and record on Data Sheet 6-6.

6.6.3.3.4 Connect the spectrum analyzer to the output of channel 2 and terminate the channel 1 output in its characteristic impedance. Measure the signal power (if discernible) at the channel 2 output and record on Data Sheet 6-6.

6.6.3.3.5 Repeat subparagraphs 6.6.3.3.1 through 6.6.3.3.4 with channels 1 and 2 swapped.

6.6.3.3.6 Repeat subparagraphs 6.6.3.3.1 through 6.6.3.3.5 for other frequencies as desired.

6.6.3.4 Data Reduction. Calculate the isolation between the two inputs by subtracting the signal output (in dB) of the unused input from the input power. Calculate the isolation between the channels by subtracting the signal output (in dB) of the unused output from the output power of the driven channel. Record these values on Data Sheet 6-6.

Data Sheet 6-6	Telemetry Downconverters
Test 6.6	Channel isolation

Downconverter Manufacturer:	Model:
Serial No.:	

Test Personnel:	Date:	Location:

Input frequency: _____ MHz

Input power: _____ dBm

INPUT POWER (dBm)			**OUTPUT POWER (dBm)**		
Channel	Other Input	Isolation	Channel 1	Channel 2	Isolation
1		dB			dB
2		dB			dB

6.7 TEST: Spurious Signal

6.7.1 Purpose. This test measures the spurious signals generated by the downconverter. Spurious signals are defined as any undesired signals in the downconverter output. Some spurious signals are generated by the downconverter (that is, local oscillator related spurs) and some are the result of IM products formed by the mixing of strong input signals. Refer to Appendix A for a discussion of IM products.

6.7.2 Test Equipment. Signal generator, spectrum analyzer, and terminations (characteristic impedance).

6.7.3 Test Method.

6.7.3.1 Setup. Connect the test equipment as shown in Figure 6-8. Unused downconverter inputs and outputs should be terminated in their characteristic impedance. If the downconverter is a dual channel unit, this test should be performed on both channels.

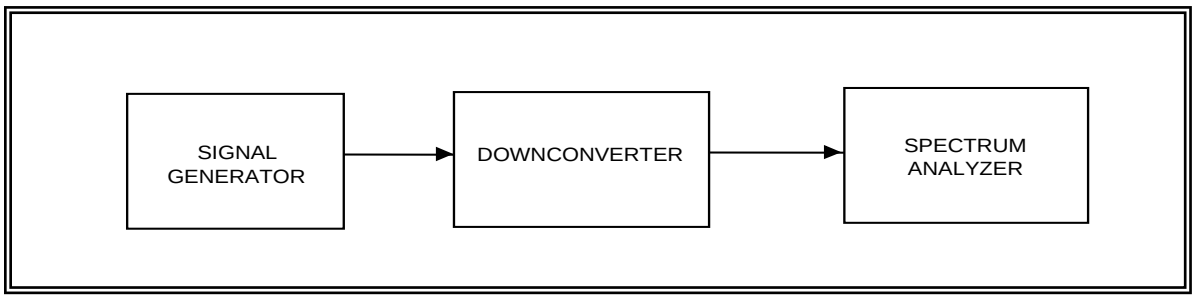

Figure 6-8. Downconverter spurious signal generation (see test 6.7).

6.7.3.2 Conditions. Perform this test under laboratory conditions after the specified warm-up time. All procedures are conducted with continuous wave signals (unmodulated) into the device under test.

6.7.3.3 Procedure.

6.7.3.3.1 Set the signal generator frequency to the center of the passband for the device under test. Set the signal generator level to a value 20 dB below the 1-dB gain compression input level measured in test 6.1. Connect the spectrum analyzer to the signal generator output. Verify that no spurious signals are present at the signal generator output.

6.7.3.3.2 Connect the signal generator to the downconverter input and the spectrum analyzer to the downconverter output. Monitor the spectrum from 10 MHz to 10 GHz. Record the frequency and power of any extraneous signals that are less than 60 dB below the desired output signal in Data Sheet 6-7.

6.7.3.4 Data Reduction. Annotate the Data Sheet if the detected signal is a harmonic of the desired signal (harmonic distortion) or equal to the local oscillator frequency (local oscillator feed through).

Data Sheet 6-7	Telemetry Downconverters	
Test 6.7	Spurious signal generation	
Downconverter Manufacturer:		Model:
Serial No.:		
Test Personnel:	Date:	Location:

Input frequency: _____ MHz

Signal output frequency: _____ MHz

Local oscillator frequency: _____ MHz

Input power: _____ dBm

Signal output power: _____ dBm

Spurious Signals	
Frequency (MHz)	**Power (dBm)**

6.8 TEST: Image Rejection

6.8.1 Purpose. This test measures the image rejection of the downconverter. Image rejection is defined as the ratio of the power of the desired sideband input signal to the undesired sideband input signal (image signal) as measured at the downconverter output. Every device using a mixer and a local oscillator such as a downconverter or receiver is essentially tuned to two frequencies at the same time. This test measures the downconverter's ability to differentiate between the band of frequencies the tester wants to pass verses the band of frequencies the tester wants to reject.

6.8.2 Test Equipment. Sweep generator, spectrum analyzer, and terminations (characteristic impedance).

6.8.3 Test Method. This test determines image rejection by finding the difference in output amplitude between an input signal in the specified input band and an input at a frequency equally spaced on the other side of the local oscillator.

6.8.3.1 Setup. Connect the test equipment as shown in Figure 6-9. Unused downconverter inputs and outputs should be terminated in their characteristic impedance. If the downconverter is a dual channel unit, this test should be performed on both channels.

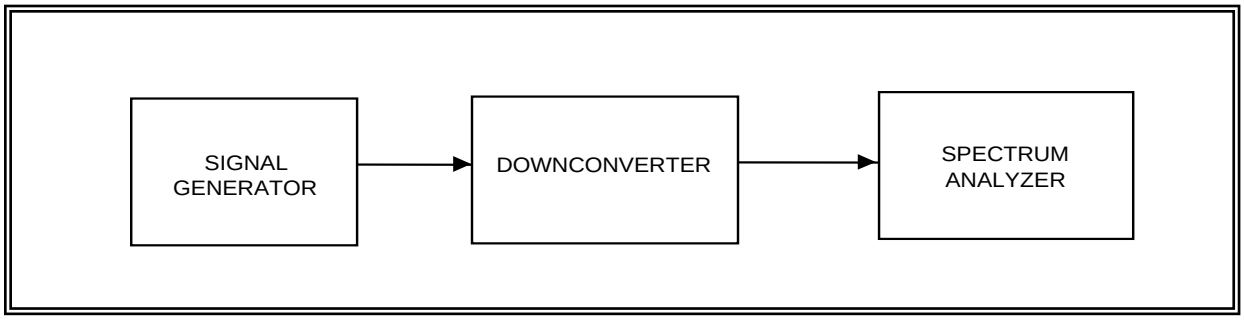

Figure 6-9. Image rejection test setup (see test 6.8).

6.8.3.2 Conditions. Perform this test under laboratory conditions after the specified warm-up time. All procedures are conducted with continuous wave signals (unmodulated) into the device under test.

6.8.3.3 Procedure.

6.8.3.3.1 Set the sweep generator to slowly sweep across the band of frequencies equal to two times the local oscillator frequency minus the specified input frequency range. For example, if the specified input frequency range was 2200 to 2300 MHz and the local oscillator frequency was 1985 MHz, the sweep generator would be set to sweep from 2 (1985) - (2200 to 2300) or 1770 to 1670 MHz. Set the sweep generator level to a value 20 dB below the 1-dB gain compression input level measured in test 6.1. Connect the spectrum analyzer to the sweep generator output. Verify that no spurious signals are present at the sweep generator output.

6.8.3.3.2 Connect the sweep generator to the downconverter input and the spectrum analyzer to the downconverter output. Monitor the spectrum in the frequency band of interest (215 to 315 MHz for the previous example). Note the frequencies where the signal is the largest. Put the sweep generator in fixed frequency mode and find the input and output frequency and output power of the largest signal and record on Data Sheet 6-8.

6.8.3.3.3 Set the sweep generator frequency equal to two times the local oscillator frequency minus the input frequency which produced the largest amplitude mentioned previously. For example, if an input frequency of 1700 MHz produced the largest output and the local oscillator frequency was 1985 MHz, set the sweep generator frequency to 2270 MHz. Record the input and output frequencies and output power on Data Sheet 6-8.

6.8.3.4 Data Reduction. Calculate the image rejection by subtracting the power measured in subparagraph 6.8.3.3.2 from the power measured in subparagraph 6.8.3.3.3.

Data Sheet 6-8	Telemetry Downconverters
Test 6.8	Image Rejection

Downconverter Manufacturer:	Model:
Serial No.:	

Test Personnel:	Date:	Location:

Input power: _____ dBm

Frequency Input	Image Level (MHz) (dBm) Output	Frequency Output	Signal Level (MHz) (dBm) Input	Image Rejection Output	Output	(dB)

6.9 TEST: Local Oscillator Frequency Accuracy and Stability

6.9.1 Purpose. This test measures the frequency accuracy and stability of the local oscillator. These are important parameters in determining how close the downconverter output frequency will be to its intended frequency. Local oscillator inaccuracies or drifting will cause the output frequency to be off, and potentially, the corresponding telemetry receiver to be mistuned.

6.9.2 Test Equipment. Two frequency counters, RF signal generator and power splitter.

6.9.3 Test Method. This test measures the output frequency with a known input frequency. The local oscillator frequency is calculated by subtracting the output frequency from the input frequency. If the local oscillator signal is available as a test point, the local oscillator frequency can be directly measured and recorded on Data Sheet 6-9.

6.9.3.1 Setup. Connect the test equipment as shown in Figure 6-10.

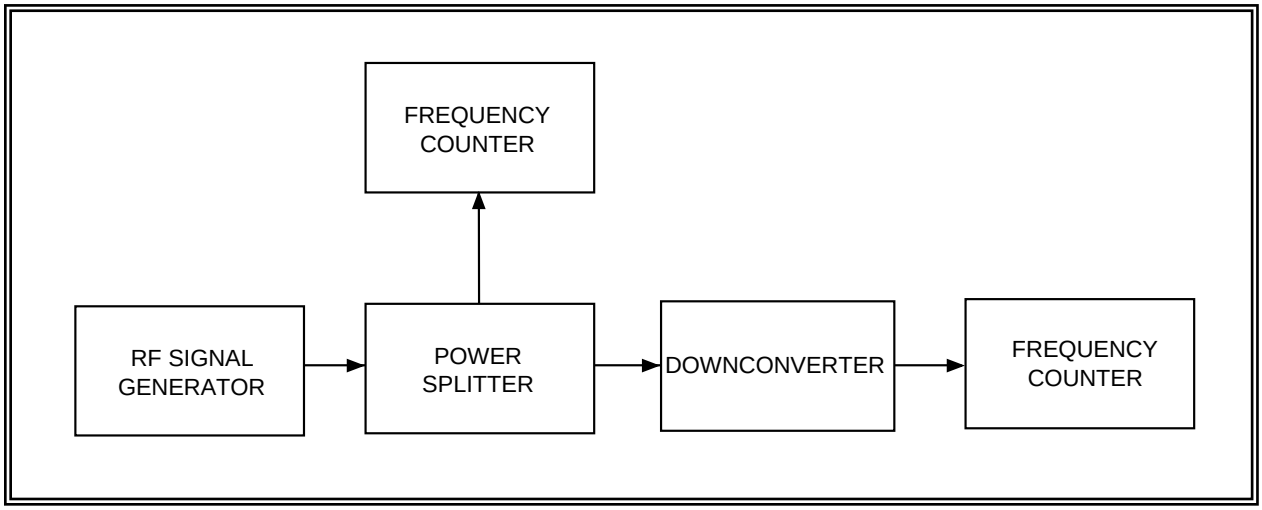

Figure 6-10. Local oscillator frequency accuracy and stability (see test 6.9).

6.9.3.2 Conditions. Perform this test under laboratory conditions after the specified warm-up time.

6.9.3.3 Procedure.

6.9.3.3.1 Set the input frequency to the center of the passband. Set the input amplitude to –20 dBm. Count the downconverter input and output frequencies. Record the time of day and frequencies on Data Sheet 6-9.

6.9.3.3.2 Set the input frequency to the highest frequency in the passband. Count the downconverter input and output frequencies. Record the time of day and frequencies on Data Sheet 6-9. If the output frequency is higher than measured in subparagraph 6.9.3.3.1, the local oscillator frequency is lower than the input frequency. If the output frequency is lower than measured in subparagraph 6.9.3.3.1, the local oscillator frequency is higher than the input frequency.

6.9.3.3.3 Repeat subparagraph 6.9.3.3.1 at desired intervals to determine stability (frequency change).

6.9.3.4. Data Reduction. Calculate local oscillator frequency (input frequency minus output frequency), maximum frequency error (calculated local oscillator frequency minus specified local oscillator frequency), and total local oscillator frequency change (maximum local oscillator frequency minus minimum local oscillator frequency) and record on Data Sheet 6-9.

NOTE 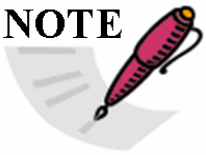	This procedure assumes low side local oscillator injection (local oscillator frequency lower than input frequency). If high side injection (local oscillator frequency higher than input frequency) is used, the local oscillator frequency is the sum of the input and output frequencies.

Data Sheet 6-9	Telemetry Downconverters
Test 6.9	Local oscillator frequency accuracy and stability

Downconverter Manufacturer:		Model:
Serial No.:		
Test Personnel:	Date:	Location:
Specified local oscillator frequency:	MHz	

	Frequency (MHz)		
Time	Input	Output	Local oscillator

Maximum local oscillator frequency error: _____ Hz

Local oscillator frequency change: _____ Hz

6.10 TEST: Local Oscillator Radiation Test

6.10.1 Purpose. This test determines if any emissions are appearing at the downconverter input because of radiation from the local oscillator. Radiation from the local oscillator can interfere with other downconverters or telemetry receivers in the system. This emission interference happens when the signal from one downconverter's local oscillator is fed back into another downconverter's input. This situation is possible when two or more downconverters are driven from a common multicoupler or power splitter having poor output port isolation.

6.10.2 Test Equipment. An RF signal generator, spectrum analyzer, and power meter.

6.10.3 Test Method. A spectrum analyzer is used to scan across the downconverter input frequency band to detect any emissions.

6.10.3.1 Setup. Connect the test equipment as shown in Figure 6-11.

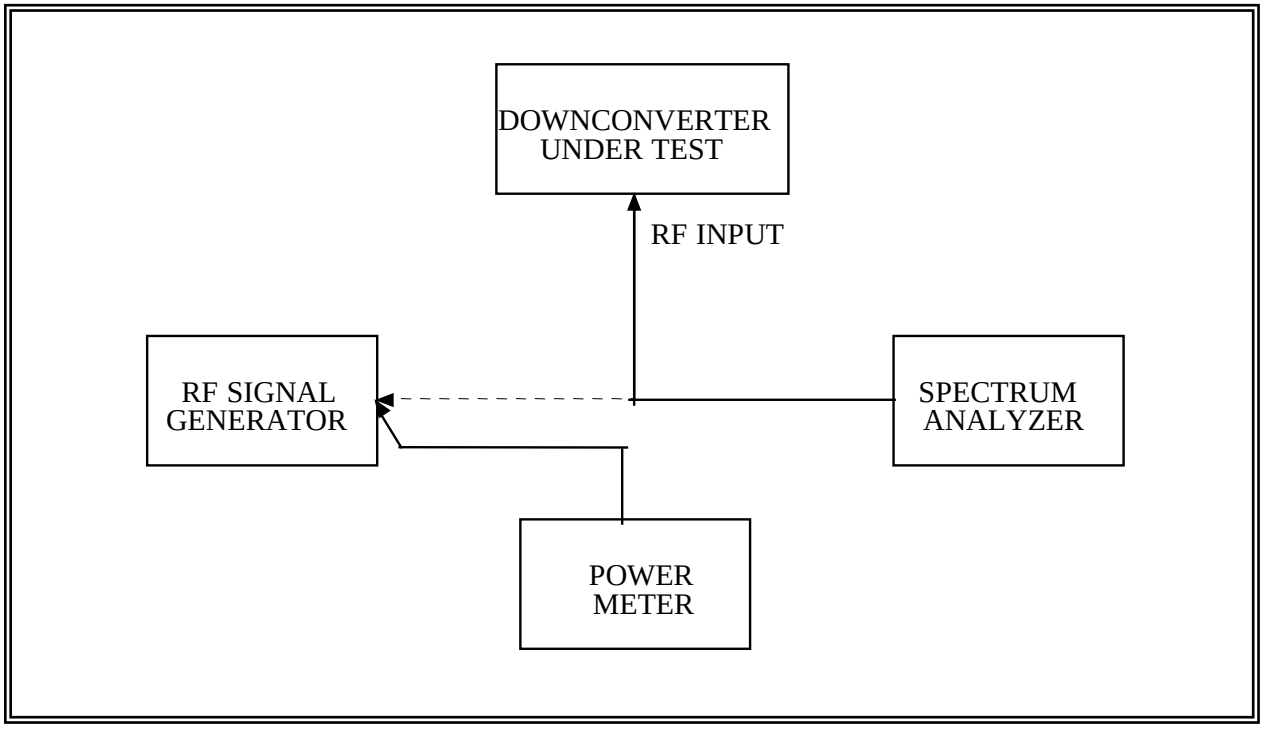

Figure 6-11. Local oscillator radiation test (see test 6.10).

6.10.3.2 Conditions. Use double shielded cable (RG 214 or equivalent) between the spectrum analyzer and the downconverter RF input.

6.10.3.3 Procedure.

6.10.3.3.1 Connect the power meter to the RF signal generator output and adjust the generator frequency to correspond to the downconverter center operating frequency. Adjust the output level to –25 dBm. This signal will be used to calibrate the spectrum analyzer.

6.10.3.3.2 Disconnect the power meter and connect the RF signal generator to the spectrum analyzer. Adjust the analyzer so that the –25 dBm input signal to the connecting cable appears as 0 dB on the display unit. The spectrum analyzer can now detect signals as low as –85 dBm. (It is assumed that the spectrum analyzer has a 60-dB dynamic range.) Indicated amplitudes must be corrected by –25 dBm to obtain correct component amplitudes (see Data Sheet 6-10). Calibration of the spectrum analyzer should be checked at each observed frequency.

6.10.3.3.3 Remove the cable from the RF generator and connect the downconverter RF input to the spectrum analyzer. Tune the spectrum analyzer slowly across the frequency range from 10 MHz to 10 GHz and record the frequency and amplitude of all signals observed.

6.10.3.3.4 Record measured data on Data Sheet 6-10.

6.10.3.4 Data Reduction. None

Data Sheet 6-10	Telemetry Downconverters	
Test 6.10	Local oscillator radiation test	
Downconverter Manufacturer:		Model:
Serial No.:		
Test Personnel:	Date:	Location:

Frequency (MHz)	**Indicated Amplitude (dBm)**	**Calibration Correction**	**Corrected Amplitude (dBm)**
		–25 dBm	

CHAPTER 7

TEST PROCEDURES FOR PCM/FM, SOQPSK-TG, FQPSK-B, FQPSK-JR, AND ARTM CPM DEMODULATORS

These digital modulation schemes have become standard in most telemetry systems. The following test procedures are recommended for testing demodulators used for these modulation schemes.

TABLE 7-1.
TEST MATRIX FOR TELEMETRY DEMODULATORS

Test & Paragraph Number	Test Description
7.1	Demodulator Bit Error Probability versus E_b/N_o
7.2	Re-acquisition and synchronization loss thresholds
7.3	Bit rate and input frequency tracking
7.4	Demodulator acquisition time and flat fade recovery time
7.5	Demodulator adjacent channel interference test
7.6	PCM/FM demodulator modulation index sensitivity test

7.1 TEST: Demodulator Bit Error Probability versus E_b/N_0

7.1.1 Purpose. The purpose of this test to measure the bit error probability versus E_b/N_0 performance of the demodulator.

7.1.2 Test Equipment. Bit error rate test set (with outputs matched to signal source inputs, i.e., TTL, ECL), spectrum analyzer, attenuator, waveform signal source, noise test set.

7.1.3 Test Method

7.1.3.1 Setup. Connect test equipment as shown on Figure 7-1 or 7-2. This paragraph presents a method for finding the attenuation that results in an E_b/N_0 of 15 dB when the attenuator plus receiver combination shown in Figure 7-2 is used.

7.1.3.1.1 First, apply a “101010” repeating pattern to the modulator. This pattern should produce an unmodulated carrier signal. If not, verify that the modulator is properly differentially encoding the data source. Turn off the source and set the attenuation to the maximum value. Use automatic gain control (AGC) freeze or manual gain to set the noise power at the receiver intermediate frequency (IF) output in the linear region. Measure the power level.

7.1.3.1.2 Turn on the source and decrease the attenuation until the power level at the IF output increases by 3 dB. This value is the 0-dB IF carrier-to-noise ratio and the E_b/N_0 is 10log(IF bandwidth/bit rate). Put the receiver in AGC mode and decrease the attenuation by approximately 15 –10 log(IF bandwidth/bit rate). Use AGC freeze or manual gain to set the noise power at the receiver IF output in the linear region. Measure the power level (S+N) in watts.

7.1.3.1.3 Turn off the source and set the attenuation to the maximum value. Measure the power level (N) in watts. Calculate the E_b/N_0 from 10log(((S+N)–N) / N)+10log(IF bandwidth/bit rate). The most accurate value to use for IF bandwidth is the equivalent noise power bandwidth but, if the –3-dB bandwidth (either measured or specified) is the only value readily available, it will give nearly the same value for E_b/N_0. If the measured value is not within 0.5 dB of 15 dB, change the attenuation by the appropriate amount to get within 0.5 dB of 15 dB and repeat the (S+N) and (N) measurements and calculations. The E_b/N_0 is now calibrated and will change by 1 dB for each 1 dB of attenuation change.

7.1.3.2 Conditions. This test can be performed using a waveform signal source at the demodulator input frequency plus a noise test set which generates the selected E_b/N_0; an waveform signal source plus noise test set at a higher frequency which generates the selected E_b/N_0 followed by downconversion to the demodulator input frequency; or a waveform signal source followed by an attenuator and a telemetry receiver which are then calibrated in terms of E_b/N_0. The signal should be non-linearly amplified to better reflect a typical telemetry transmitter.

7.1.3.3 Procedure.

7.1.3.3.1 Set the bit error test set to generate the desired bit rate with a pseudo noise sequence length of at least 2^{11}–1 (2047) bits and preferably at least 2^{20}–1 bits long (the longer sequence is a better simulation of the characteristics of an encrypted signal). Set the signal source to generate a non-linearly amplified signal. Use the spectrum analyzer to verify the signal spectrum looks like the expected (PCM/FM, SOQPSK-TG/ /FQPSK-JR, ARTM CPM) spectrum.

7.1.3.3.2 Set the initial E_b/N_0 to approximately 15 dB and verify that the bit error test set synchronizes in the non-inverted state. If the bit error test set does not synchronize, invert the output polarity of the demodulator. If the bit error test set now synchronizes, there is a polarity inversion somewhere. The source polarity can be checked by applying all zeroes (which can frequently be done by terminating the data input to the modulator) and verifying that the output is an unmodulated signal with a frequency equal to center frequency minus (bit rate)/4. If the output is an unmodulated signal with a frequency equal to center frequency plus bit rate/4 then the modulator is inverted. If the modulator polarity is not inverted but the demodulator polarity is inverted, then the inversion is in the demodulator

7.1.3.3.3 Set the initial E_b/N_0 to approximately 15 dB and measure the bit errors in an interval of 10^7 or 10^8 bits. If the bit error rate is larger than 1 per 10^6 bits, increase the E_b/N_0 until the error rate is less than 1 error per 10^6 bits and record the E_b/N_0 as the starting value on the Data Sheet.

Measure the bit error probability in 1-dB intervals (reduce the E_b/N_0 by 1 dB for each step) and record the E_b/N_0 and bit error probability on Data Sheet 7-1. If more than 1000 errors occur in an interval, the measurement time can be reduced by a factor of 10 without significantly degrading accuracy.

7.1.3.3.4 Repeat for other bit rates as desired.

7.1.3.4 Data Reduction. Compare the measured BEP versus E_b/N_0 with the specification. Plot the data and interpolate between points to estimate the BEP at a given E_b/N_0 or to find the E_b/N_0 that is required for a given BEP.

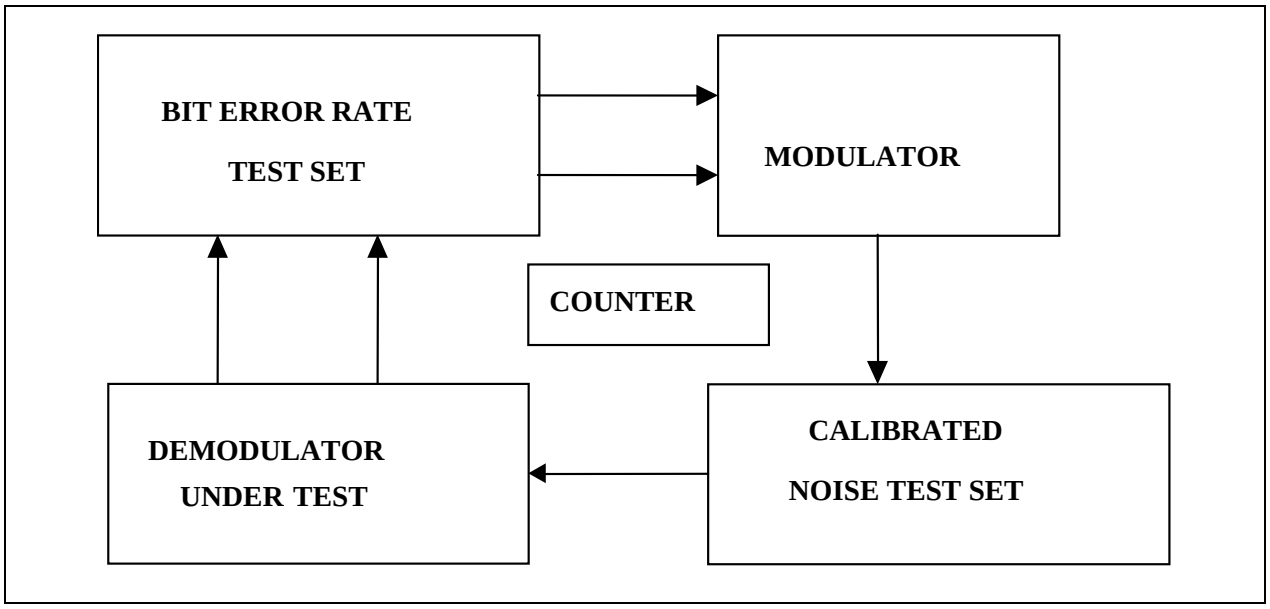

Figure 7-1. Test setup for demodulator bit error probability tests.

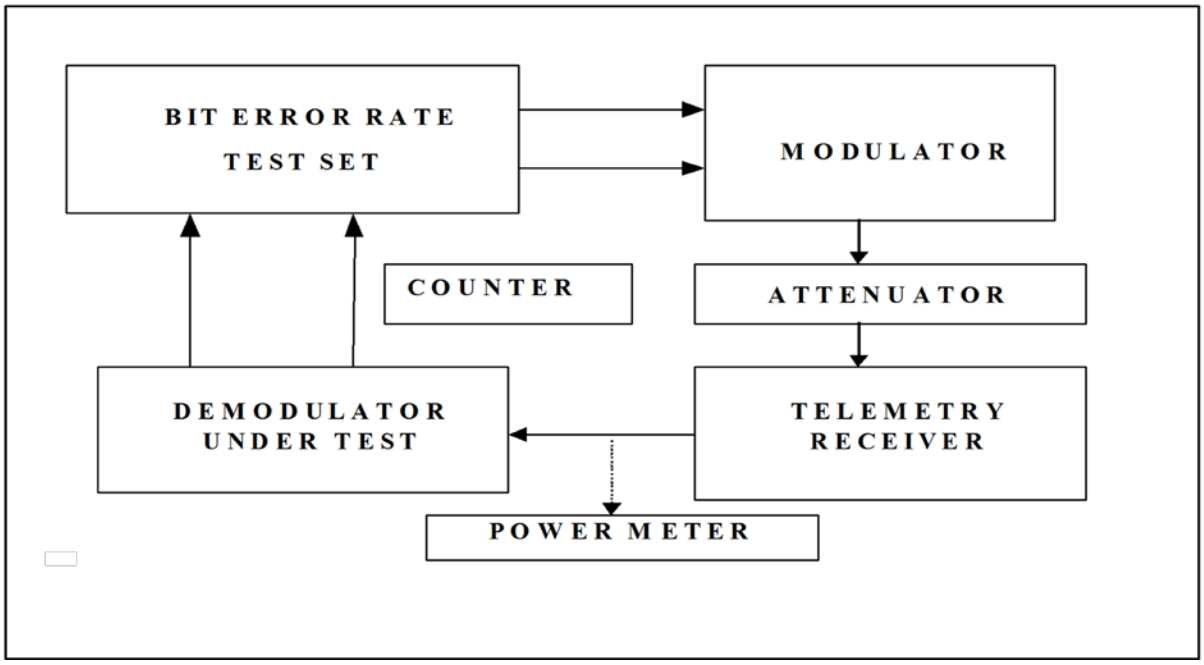

Figure 7-2. Alternate setup for demodulator bit error probability test.

Data Sheet 7-1	Demodulators
Test 7.1	Bit error probability versus E_b/N_0

Manufacturer: Model:

Serial No.:

Test Personnel: Date:

Center frequency: _____ MHz

Data and clock interface: ☐ TTL ☐ ECL ☐ Other _____
(Check a box or write in type)

Bit rate tested: _____ Mb/s

E_b/N_0	Bit Error Probability

7.2 TEST: Reacquisition and Synchronization Loss Thresholds

7.2.1 Purpose. The purpose of this test is to measure the minimum E_b/N_0 which results in consistent acquisition (defined as typically back in synchronization in a few seconds) and the E_b/N_0 at which synchronization starts to be lost.

7.2.2 Test Equipment. Bit error rate test set (with outputs matched to the signal source inputs, i.e., TTL, ECL), spectrum analyzer, attenuator, signal source, noise source.

7.2.3 Test Method.

7.2.3.1 Setup. Connect test equipment as shown on Figure 7-1 or Figure 7-2, depending on the test equipment available.

7.2.3.2 Conditions. This test can be performed using a signal source at the demodulator input frequency plus a calibrated noise test set which generates the selected E_b/N_0; a signal source plus noise test set at a higher frequency which generates the selected E_b/N_0 followed by downconversion to the demodulator input frequency; or a signal source followed by an attenuator and a telemetry receiver which are then calibrated in terms of E_b/N_0.

7.2.3.3 Procedure.

7.2.3.3.1 Set the bit error test set to generate the desired bit rate with a pseudo noise sequence length of at least 2047 bits and preferably at least $2^{20}-1$ bits long. Set the signal source to generate a non-linearly amplified signal with the correct modulation scheme. Verify the signal spectrum using the spectrum analyzer.

7.2.3.3.2 Set the initial E_b/N_0 to 10 dB and decrease the E_b/N_0 in 1 dB steps (0.1-dB steps are optional in the region of synchronization loss) until the bit error rate test set starts to lose synchronization. Record the lowest value of E_b/N_0 with solid synchronization on Data Sheet 7-2.

7.2.3.3.3 Set the E_b/N_0 to the lowest value at which solid synchronization was maintained. Turn off the signal source (or insert maximum attenuation). Turn the signal back on at the E_b/N_0 set above. If the signal is reacquired rapidly, then record this E_b/N_0 on Data Sheet 7-2. If the signal is not rapidly reacquired, repeat the process with the E_b/N_0 increased in 1-dB steps (0.1-dB steps are optional in the region of synchronization recovery) until rapid resynchronization occurs.

7.2.3.3.4 Repeat for other bit rates as desired.

7.2.3.4 Data Reduction. Compare the measured E_b/N_0 values with the specification.

Data Sheet 7-2	Demodulators
Test 7.2	Acquisition and synchronization loss thresholds versus E_b/N_0

Manufacturer: Model:

Serial No.:

Test Personnel: Date:

Center frequency: _____ MHz

Data and clock interface: _____

Bit rate tested: _____ Mb/s

	E_b/N_0
Synchronization loss threshold:	
Re-acquisition threshold:	

7.3 TEST: Bit Rate and Input Frequency Tracking

7.3.1 Purpose. The purpose of this test to measure the maximum carrier and bit rate errors which allow consistent acquisition (defined as typically back in synchronization in a few seconds) and tracking.

7.3.2 Test Equipment. Bit error rate test set (with outputs matched to signal source inputs, i.e., TTL, ECL, etc), spectrum analyzer, attenuator, signal source, noise source, counter.

7.3.3 Test Method.

7.3.3.1 Setup. Connect test equipment as shown on Figure 7-1 or Figure 7-2 depending on the test equipment available.

7.3.3.2 Conditions. This test can be performed using a signal source at the demodulator input frequency plus a noise test set which generates the selected E_b/N_0; a signal source plus noise test set at a higher frequency which generates the selected E_b/N_0 followed by downconversion to the demodulator input frequency; or a signal source followed by an attenuator and a telemetry receiver which are then calibrated in terms of E_b/N_0. The test equipment must be able to set the demodulator input frequency and bit rate to the required precision.

7.3.3.3 Procedure.

7.3.3.3.1 Set the bit error test set to generate the desired bit rate with a pseudo noise sequence length of at least 2047 bits and preferably at least 2^{20}–1 bits long. Set the signal source to generate the proper non-linearly amplified signal. Verify the signal spectrum using the spectrum analyzer.

7.3.3.3.2 Set the E_b/N_0 to 10 dB and monitor the BEP. Decrease the source bit rate (don't change bit rate set on demodulator) until the BEP increases by a factor of 2, or the bit error rate test set starts to lose synchronization, whichever occurs first. Count the source clock frequency and record the value on Data Sheet 7-3 as the lower frequency bit rate. Set the bit rate of the source to the nominal value. Increase the bit rate until the BEP increases by a factor of 2, or the bit error rate test set starts to lose synchronization, whichever occurs first. Count the source clock frequency, and record the value on Data Sheet 7-3 as the upper frequency bit rate. Repeat for other bit rates as desired.

7.3.3.3.3 Set the E_b/N_0 to 10 dB and monitor the BEP. Decrease the demodulator input frequency (preferably by changing the frequency of the RF source) until the BEP increases by a factor of 2, or the bit error rate test set starts to lose synchronization, whichever occurs first. Count the demodulator input frequency and record the value on Data Sheet 7-3 as the lower frequency input. Increase the demodulator input frequency until the BEP increases by a factor of 2, or the bit error rate test set starts to lose synchronization, whichever occurs first. Count the demodulator input frequency, and record the value on Data Sheet 7-3 as the upper frequency input. Repeat for other bit rates as desired.

7.3.3.4 Data Reduction. Compare the measured values with the specification.

Data Sheet 7-3	Demodulators
Test 7.3	Bit rate and input frequency tracking

Manufacturer:	Model:
Serial No.:	
Test Personnel:	Date:

Data and clock interface: _____

Center frequency: _____ MHz

Bit rate: _____ Mb/s

	Bit rate (Mb/s)	**Input Frequency** (MHz)
Lower frequency		
Higher frequency		

Center frequency: _____ MHz

Bit rate: _____ Mb/s

	Bit rate (Mb/s)	**Input Frequency** (MHz)
Lower frequency		
Higher frequency		

Center frequency: _____ MHz

Bit rate: _____ Mb/s

	Bit rate (Mb/s)	**Input Frequency** (MHz)
Lower frequency		
Higher frequency		

7.4 TEST: Demodulator Acquisition Time and Flat Fade Recovery Time.

7.4.1 Purpose. The purpose of the acquisition time test is to measure the time it takes for the demodulator to synchronize with the input sweeping carrier frequency and symbol rates after a fairly long interval of no acceptable input. The purpose of the flat fade recovery time test is to measure the time it takes for the demodulator to synchronize with the sweeping input carrier and symbol rates after a fairly short interval of no discernable input.

7.4.2 Test Equipment. Bit error rate test set (with outputs matched to signal source inputs, i.e., TTL, ECL, if required), spectrum analyzer, attenuator, signal source, noise source, digital oscilloscope, and switch.

7.4.3 Test Method.

7.4.3.1 Setup. Connect test equipment as shown on Figure 7-3.

7.4.3.2 Conditions. This test can be performed using a signal source at the demodulator input frequency plus a noise test set which generates the selected E_b/N_0; a signal source plus noise test set at a higher frequency which generates the selected E_b/N_0 followed by downconversion to the demodulator input frequency; or a signal source followed by an attenuator and a telemetry receiver that are then calibrated in terms of E_b/N_0. The power level of the noise source should be set to approximate the level of the telemetry signal in the bandwidth of interest (a receiver in manual gain control mode with no input would be a good choice for this noise source). If the bit error rate test set has the capability of measuring acquisition time, it may be used in place of the digital oscilloscope. In all conditions, the signal source should have the capability to sweep the carrier frequency at least $\pm$100kHz with a ramp-up/ramp-down profile.

7.4.3.3 Procedure.

7.4.3.3.1 Set the bit error test set to generate the desired bit rate with a pseudo noise sequence length of 2^{15}–1 bits with the sequence generated using feedback from register taps 14 and 15. A 2^{15}–1 bit maximal length sequence is used for this test because it is compatible with the IRIG 15 stage de-randomizer. One could also randomize an all ones or all zeros signal to get a good test signal. A randomized sequence of ones should produce ones at the de-randomizer output and randomized zeroes should produce zeroes (non-inverting mode assumed). Set the signal source to generate the required non-linearly amplified telemetry signal. Verify the signal spectrum using the spectrum analyzer. Set the demodulator to de-randomize the input signal. The de-randomized output should be all zeroes, if there are no bit errors. Any bit errors will show up as ones in the de-randomized output. Some demodulators output the zero state when the demodulator is out of synchronization. In this case, it may be preferable to invert the data output to more easily determine the error free state from the out-of-synchronization state. If the output is inverted, errors show up as the zero state at the de-randomized output.

7.4.3.3.2 Set the input frequency and bit rate to the nominal values selected on the demodulator. Set the initial E_b/N_0 to 15 dB. Set the switch to pass the signal for about 2 seconds and the noise signal for about 8 seconds in a pattern which repeats every 10 seconds. Trigger the digital

oscilloscope on the transition to the signal and record intervals of about 500 ms (this value may need to be varied to capture the actual acquisition times with sufficient accuracy). Set the signal source to sweep the carrier frequency $\pm$100kHz, or to a range compatible with the capture range of the demodulator. The acquisition time is the time at which the output data is stable in the all zeroes state. Repeat the test 10 times and record the acquisition times on Data Sheet 7-4.

7.4.3.3.3 Repeat 7.4.3.3.2 for various combinations of input frequency sweep range, bit rate offset, and E_b/N_0.

7.4.3.3.4 Change the switch control to 1500 ms and 500 ms in noise mode (flat fade recovery or reacquisition nominal test conditions). Repeat 7.4.3.3.2 and 7.4.3.3.3 for the desired combinations of input frequency sweep range, bit rate offset and E_b/N_0

7.4.3.3.5 Repeat 7.4.3.3.2, 7.4.3.3.3, and 7.4.3.3.4 for various bit rates and switch on/off times, as desired.

7.4.3.4 Data Reduction. Compare the measured acquisition and reacquisition times with the values in the specification.

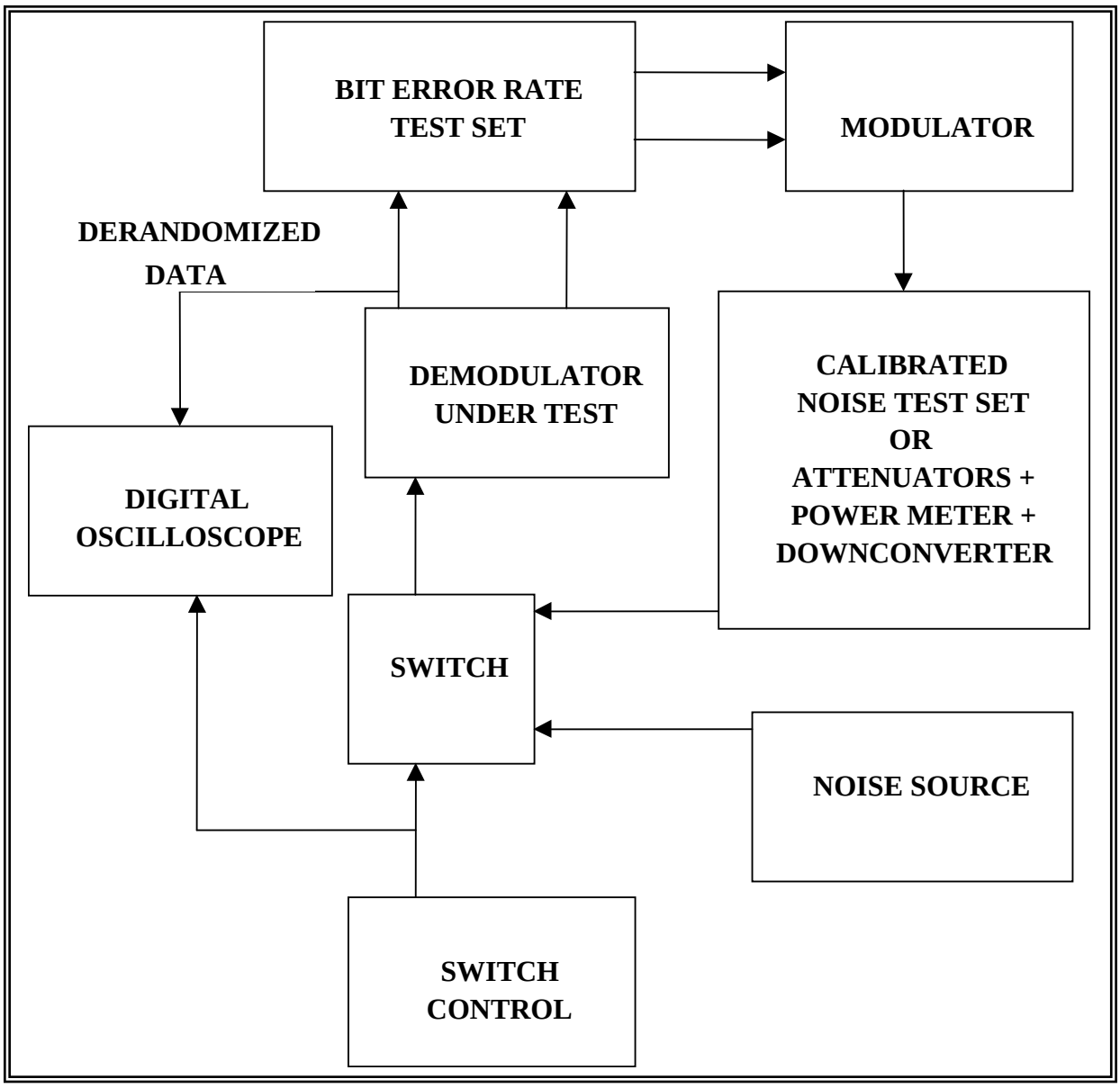

Figure 7-3. Test setup for demodulator acquisition time and flat fade recovery tests.

Data Sheet 7-4	Demodulators
Test 7.4	Demodulator acquisition time and flat fade recovery time

Manufacturer: Model:

Serial No.:

Test Personnel: Date:

Center frequency: _____ MHz

Data and clock interface: _____

Bit rate tested: _____ Mb/s

Carrier sweep range _____ kHz

Switch on-time (modulator position) _____ seconds

Switch off-time (noise position): _____ seconds

Frequency (MHz)	**Bit Rate** (Mb/s)	**E_b/N_0** (dB)	**Acquisition Time** (ms)

7.5 TEST: Demodulator Adjacent Channel Interference Test.

7.5.1 Purpose. The purpose of the adjacent channel interference test is to measure the effect on bit error probability of signals in adjacent frequency channels. The results will be a function of modulation methods, receiver filter characteristics, bit rates, relative power levels, frequency spacing, and demodulator characteristics.

7.5.2 Test Equipment. Bit error rate test set (with outputs matched to the signal source inputs, i.e., TTL, ECL, if required), spectrum analyzer, attenuators, telemetry signal sources, noise source, power splitters, power meter, (a specialized test set can replace most of this test equipment if one is available), and other RF sources as needed (for example, if FM interfering signals will be tested, then FM signal sources with appropriate premodulation filtering will be needed).

7.5.3 Test Method.

7.5.3.1 Setup. Connect test equipment as shown in Figure 7-6.

7.5.3.2 Conditions. This test can be performed using various modulation types as the interferers. The test can also be performed with only one interferer or with two interferers (one above and one below the victim signal). This test can be performed with actual telemetry transmitters or with appropriate laboratory signal generators. The laboratory generators should be passed through an amplifier of the same type as will be used in the actual transmitters (an amplifier operating in its non-linear range can be used if an amplifier of the proper type is not available.) If the purpose of the test is to evaluate performance during a test mission with a specific set of frequencies, bit rates, and modulation types, use these parameters for the test.

7.5.3.3 Procedure.

7.5.3.3.1 Set the bit error test set to generate the desired bit rate with a pseudo noise sequence length of at least $2^{11}-1$ bits. Use this bit error test set as the input to the telemetry signal modulator (this signal will be the center signal and called the victim). The modulator output will typically need to be non-linearly amplified to simulate a typical telemetry transmitter. Similarly, modulate the other two RF sources with independent pseudo noise sequences at the same bit rate and non-linearly amplify the outputs. Set the frequencies of these signals to frequencies equal to the bit rate above and below the frequency of the victim signal.

7.5.3.3.2 Apply maximum attenuation to the two interferers to effectively remove them from the output (at least 30 dB below desired signal power). Set the attenuators and noise source level to produce a bit error probability (BEP) of 10^{-5}. Increase the level of the victim signal by 1 dB.

7.5.3.3.3 Use the spectrum analyzer (or alternatively a power meter) to set the relative powers of the signals. A typical starting point is to have the two interfering signals 20 dB larger than the victim signal. Vary the attenuator that is common to the two interferers until the BEP is again 10^{-5}. Measure the relative power levels of the victim and interferers and record on Data Sheet 7-5.

7.5.3.3.4 Repeat 7.5.3.3.3 and 7.5.3.3.4 for various bit rates, modulation types of interferers, center frequencies, and frequency separations, as desired.

7.5.3.4 Data Reduction. Subtract the victim power level from the interferer power level and record on Data Sheet 7-4.

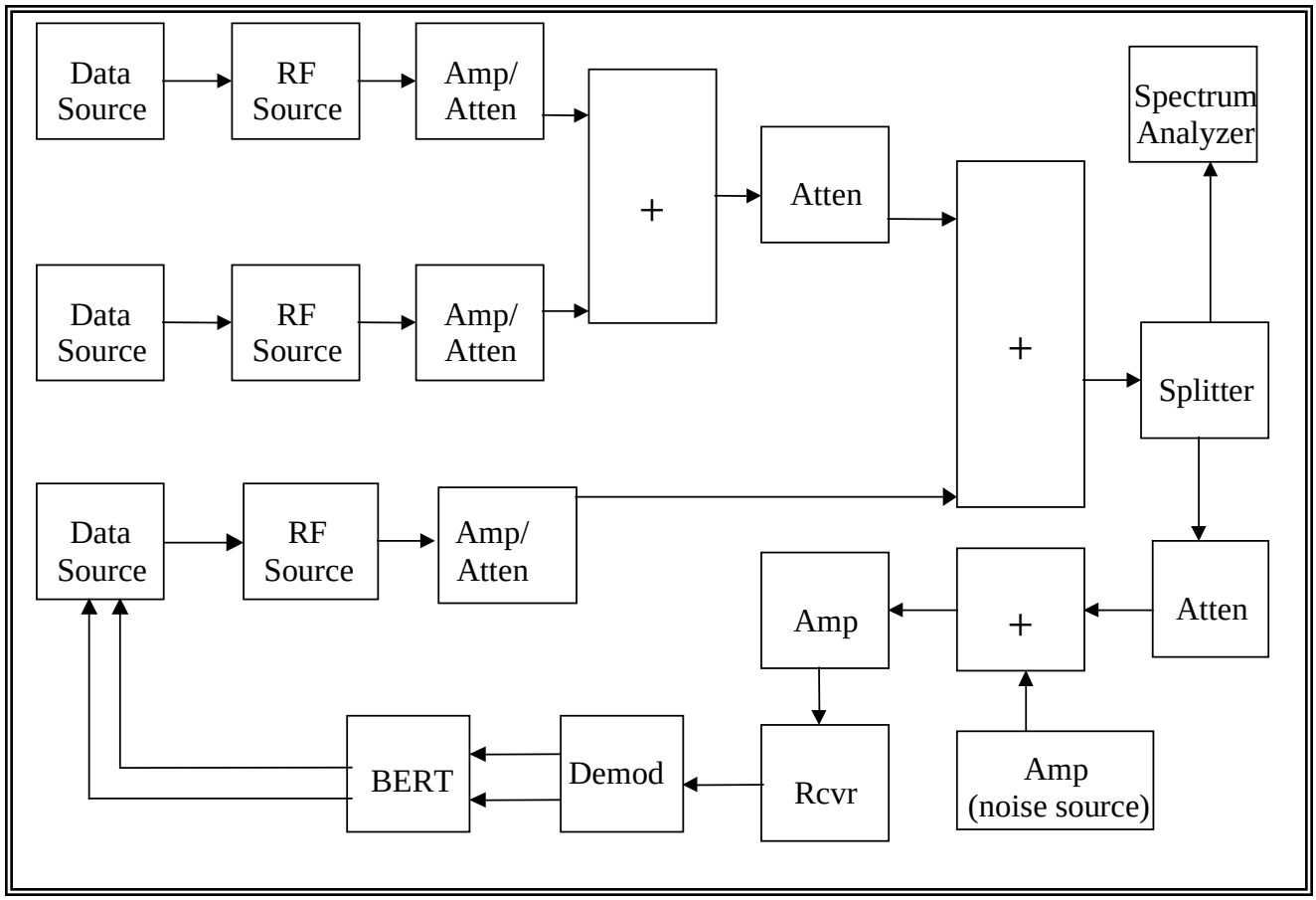

Figure 7-4. Test setup for adjacent channel interference test.

Data Sheet 7-5	Demodulators
Test 7.5	Adjacent channel interference
Manufacturer:	Model:
Serial No.:	
Test Personnel:	Date:

Receiver IF Bandwidth _____ MHz

Victim: Frequency _____ MHz Bit rate ____ Mb/s Modulation type ____

Peak deviation _____ Filter BW _____ MHz Power _____ dBm

Interferer 1: Frequency _____ MHz Bit rate _____ Mb/s Modulation type ____

Peak deviation _____ Filter BW _____ MHz Power _____ dBm

Interferer 2: Frequency _____ MHz Bit rate _____ Mb/s Modulation type ____

Peak deviation _____ Filter BW _____ MHz Power _____ dBm

Power level difference between Victim and Interferers _____ dB

Receiver IF Bandwidth _____ MHz

Victim: Frequency _____ MHz Bit rate _____ Mb/s Modulation type ____

Peak deviation _____ Filter BW _____ MHz Power _____ dBm

Interferer 1: Frequency _____ MHz Bit rate _____ Mb/s Modulation type ____

Peak deviation _____ Filter BW _____ MHz Power _____ dBm

Interferer 2: Frequency _____ MHz Bit rate _____ Mb/s Modulation type ____

Peak deviation _____ Filter BW _____ MHz Power _____ dBm

Power level difference between Victim and Interferers _____ dB

Receiver IF Bandwidth _____ MHz

Victim: Frequency _____ MHz Bit rate _____ Mb/s Modulation type _____

Peak deviation _____ Filter BW _____ MHz Power _____ dBm

Interferer : 1 Frequency _____ MHz Bit rate _____ Mb/s Modulation type _____

Peak deviation _____ Filter BW _____ MHz Power _____ dBm

Interferer 2: Frequency _____ MHz Bit rate _____ Mb/s Modulation type _____

Peak deviation _____ Filter BW _____ MHz Power _____ dBm

Power level difference between Victim and Interferers _____ dB

7.6 TEST:PCM/FM Demodulator Modulation Index Sensitivity Test

7.6.1 Purpose: The purpose of this test is to measure the demodulator sensitivity to changes in the modulation index of the source PCM/FM signal.

7.6.2 Test Equipment: Bit error rate test set, spectrum analyzer, PCM/FM signal source, directional coupler

7.6.3 Test Method

7.6.3.1 Setup: Connect the test equipment as shown in Figure 7-5. Verify the input level into the demodulator is within the linear operating range of the demodulator.

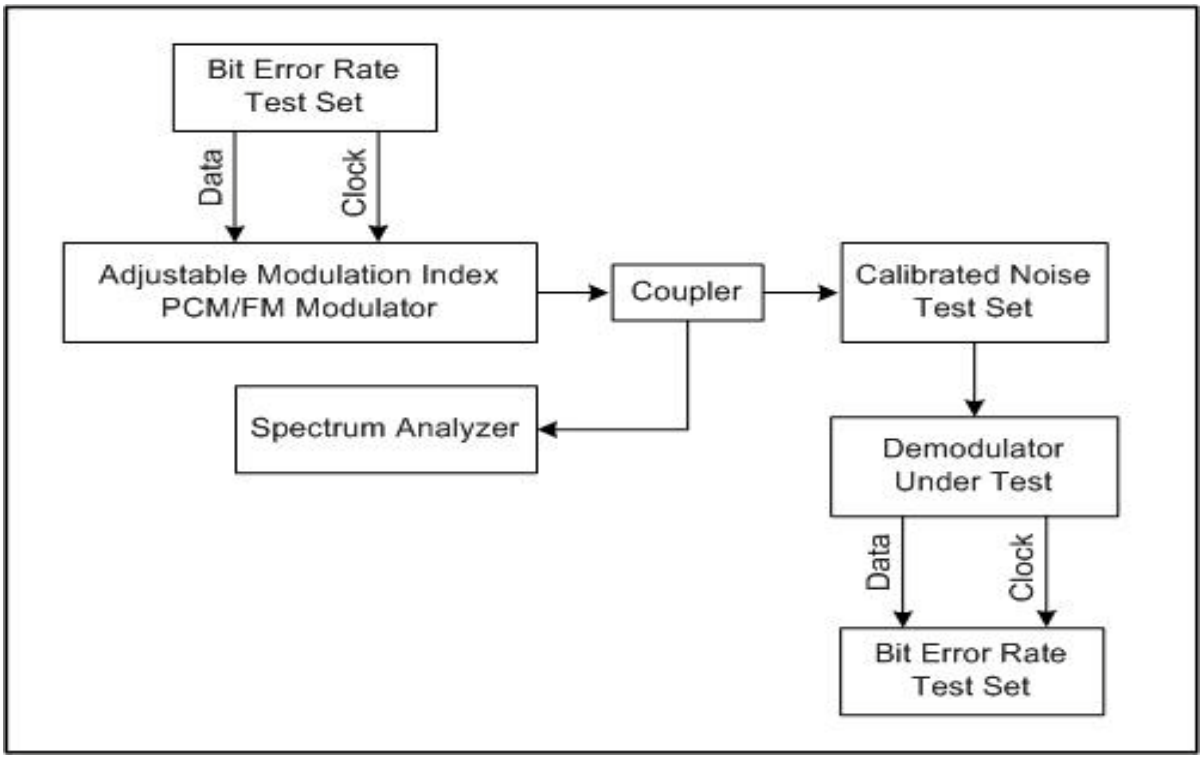

Figure 7-5. Test Setup for Modulation Index Sensitivity Test

7.6.3.2 Conditions: This test must use a PCM/FM modulator that can control the modulation index. This index must be verified utilizing the spectrum analyzer and the equation called out in the Telemetry Applications Handbook.

7.6.3.3 Procedure.

7.6.3.3.1 Set the bit error test set to generate the desired bit rate with a pseudo noise sequence of at least 211-1 (2047) bits and preferably at least 2020-1 bits long (the longer sequence is a better simulation of the characteristics of an encrypted signal). Set the signal source to generate PCM/FM with a modulation index of 0.7. Use the spectrum analyzer to verify the signal

spectrum looks like a PCM/FM spectrum and verify the modulation index is 0.7 which is equal to peak deviation of 0.35*(bit rate).

7.6.3.3.1 Perform a Bit Error probability versus E_b/N_o test as described in Test 7.1.3.3 with the modulation index set at 0.7. This curve will be the baseline curve in which to compare the results.

7.6.3.3.2 Repeat the bit error probability versus E_b/N_o test with modulation indices between 0.6 and 0.8.

7.6.3.3.3 Repeat test for other bit rates desired.

7.6.3.4 Data Reduction: Compare the BEP versus E_b/N_o curve with a modulation index of 0.7 with curves at other modulation indices. Plot the data and interpolate between points to estimate the BEP at a given E_b/N_o or to find the E_b/N_o that is required for a given BEP.

Data Sheet 7-6	PCM/FM Demodulator Modulation Index Sensitivity Test
Test 7.6	PCM/FM Demodulator Modulation Index Sensitivity Test
Manufacturer:	Model:
Serial No.:	
Test Personnel:	Date:
Center frequency:	**(IF or RF)**
Data and clock interface:	**(if any): TTL RS-422 ECL Other:**
Modulation Index:	**Bit Rate:**

E_b/N_o	Bit Error Probability

APPENDIX A

INTERMODULATION (IM) PRODUCTS AND INTERCEPT POINT

1.0 General

These notes are presented to point out a severe problem in systems involving preamplifiers. Intermodulation (IM) products are produced whenever the signal strength is sufficient to cause the amplifier (or receiver) to operate in the nonlinear portion of the characteristics of the unit. A major cause of intermodulation is gain compression. Because of a limited range of linear operation, the IM products of neighboring signals are very likely to fall on top of the desired signal, many times resulting in complete loss of data. A brief mathematical discussion of the factors involved in the production of objectionable IM components with two input signals is presented as a way of introducing the problem. Intermodulation noise can also distort the signal by entering the transmission path and modulating the signal or it can be caused by nonlinear characteristics of the electrical components.

1.1 Intermodulation Products

The output of an amplifier can be expressed as a power series with:

$e_{out} = k_1 e_{in} + k_2 e_{in}^2 + k_3 e_{in}^3 +$ . . . higher order terms that are considered negligible for this analysis.

If $e_{in} = (e_1 \sin w_1 t + e_2 \sin w_2 t)$, expansion is shown to yield the following expressions in the output:

$$e_{out} = \frac{1}{2} k_2 (e_1^2 + e_2^2) \qquad \text{(Eq. A-1)}$$

$$+ [k_1 e_1 + \frac{3}{2} k_3 e_1 e_2^2 + \frac{3}{4} k_3 e_1^3] \sin \omega_1 t \qquad \text{(Eq. A-2)}$$

$$+ [k_1 e_2 + \frac{3}{2} k_3 e_1^2 e_2 + \frac{3}{4} k_3 e_2^2] \sin \omega_2 t \qquad \text{(Eq. A-3)}$$

$$- \frac{1}{2} k_2 e_1^2 \cos 2\omega_1 t \qquad \text{(Eq. A-4)}$$

$$- \frac{1}{2} k_2 e_2^2 \cos 2\omega_2 t \qquad \text{(Eq. A-5)}$$

$$- \frac{1}{4} k_3 e_1^3 \sin 3\omega_1 t \qquad \text{(Eq. A-6)}$$

$$-\frac{1}{4}\,k_3e_2^{\,3}\sin 3\omega_2 t \qquad \text{(Eq. A-7)}$$

$$+\,k_2e_1e_2\cos(\omega_1-\omega_2)t \qquad \text{(Eq. A-8)}$$

$$-\,k_2e_1e_2\cos(\omega_1+\omega_2)t \qquad \text{(Eq. A-9)}$$

$$+\frac{3}{4}\,k_3e_1^{\,2}e_2\sin(2\omega_1-\omega_2)t \qquad \text{(Eq. A-10)}$$

$$-\frac{3}{4}\,k_3e_1^{\,2}e_2\sin(2\omega_1+\omega_2)t \qquad \text{(Eq. A-11)}$$

$$+\frac{3}{4}\,k_3e_1e_2^{\,2}\sin(2\omega_2-\omega_1)t \qquad \text{(Eq. A-12)}$$

$$-\frac{3}{4}\,k_3e_1e_2^{\,2}\sin(2\omega_2+\omega_1)t \qquad \text{(Eq. A-13)}$$

Expressions (A-2) and (A-3) are directly proportional to the input signals when the amplifier is operated within its linear region. Therefore, the fundamental response can be plotted with a slope of 1. Expressions (A-4), (A-5), (A-8), and (A-9) are second order terms, are proportional to the square of the input signals, and can be plotted with a slope of 2. Expressions (A-6), (A-7), (A-10), (A-11), (A-12), and (A-13) are proportional to the cube of the input and can be plotted with a slope of 3.

In general, only expressions (A-2), (A-3), (A-10), and (A-12) need to be considered for telemetry preamplifiers. All other components are far removed from the input signals and are easily removed by filtering. Expressions (A-2) and (A-3) indicate the output of the device for the desired signals; however, it should be noted that in addition to the linear gain term (k_1), the desired output is modified by the third-order coefficient (k_3).

Expressions (A-10) and (A-12) of the series expansion are of major concern in the telemetry preamplifier. These IM products are located as close to the input signals as the two input signals are from each other.

The above analysis has been simplified by considering the effect of only two signals, the inclusion of only the first three terms of the power series, and the assumption that the bandwidth is less than $2\omega_1$. In wide band systems, if higher order terms are even, the IM products are of little concern in amplifiers, because they are far removed from the desired frequency. If the terms are odd, some of the IM components will fall very near the desired frequency. Fortunately, the higher order coefficients (fifth order or greater) have considerably smaller values and are normally neglected. As more signals are added, the number of IM products increases very rapidly. For example, if the number of signals is increased from two to three, the number of the IM products close to the desired frequency increases from two to nine. The

number of potentially dangerous IM products is approximately proportional to the cube of the number of signals.

If two signals of equal amplitude are applied to the input of an amplifier of sufficient bandwidth at frequencies f_1 and f_2, the output spectrum may appear as shown in Figure A-1. The second order products will appear at $2f_1$, $2f_2$, $f_1 + f_2$, and $f_1 – f_2$. The third-order products will appear at frequencies $3f_1$, $3f_2$, $2f_1 – f_2$, $2f_1 + f_2$, $2f_2 – f_1$, and $2f_2 + f_1$. The third-order terms, $2f_1 – f_2$ and $2f_2 –f_1$, may be within the passband of a telemetry preamplifier if the bandwidth is greater than $3(f_2 – f_1)$.

NOTE	Amplifiers with bandwidths greater than one octave should be tested for second order terms.

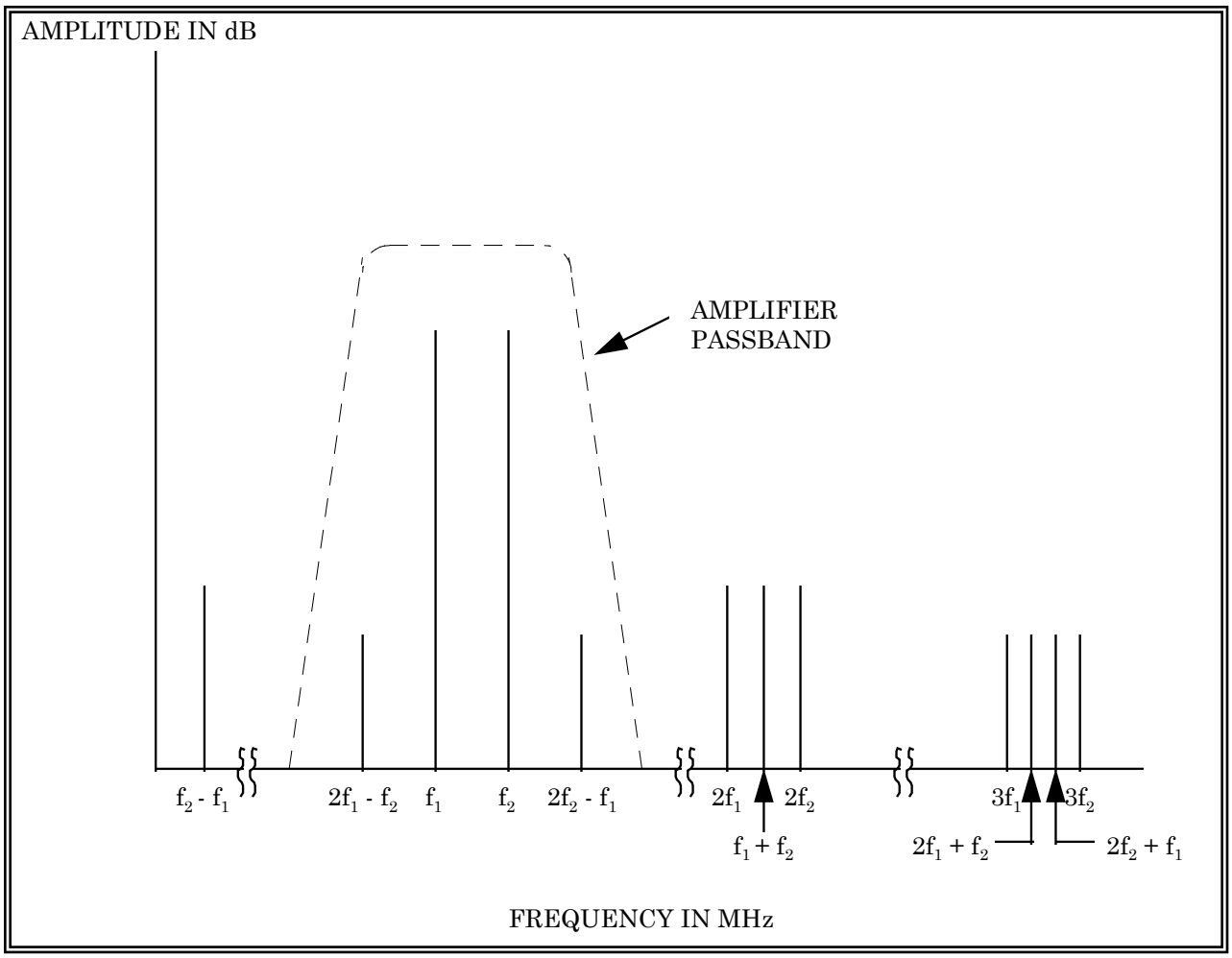

Figure A-1. Illustration of spectrum for two fundamental frequencies, f_1 and f_2, with second- and third-order response

1.2 Intercept Point

The amount of IM distortion in a system can be defined from the third-order intercept point (IP). For each 1 dB of signal strength increase of the fundamental frequency, the third-order level increases 3 dB[2]. The IP is defined as the intersection of the fundamental response of an amplifier and the higher order spurious responses extrapolated to a linear response and referred to the amplifier output. Figure A-2 illustrates a plot of the amplifier transfer characteristics including second and third-order IM terms.

Once the IP has been experimentally determined, it is possible to predict a range of operation where the second and third-order terms will not be greater than the system noise floor if the minimum detectable signal is known. This range is known as the Spurious Free Dynamic Range which is defined as the range that exists between two or more signals of equal amplitude and the IM products that result from these signals.

From Figure A-2, the following relationships can be established:

a. Power output of second-order terms. (Eq. A-14)

$$P_{o2} = 2(IP_2 - P_o) \text{ dB below IP}$$

Where:
IP2 = second-order IP
Po = fundamental signal level measured at amplifier output

b. Power output of third-order terms.

$$P_{o3} = 3(IP_3 - P_o) \text{ dB below IP}$$

Where:
IP_3 = third-order IP

c. Third-order output IP.

$$IP_{o3} = (P_o - IM_{o3}) + IM_{03}$$

Where:
IM_{o3} = third-order IM at output of amplifier.

d. $X(3) = IP_3 - P_o$

e. $2X(3) = P_o - IM_{o3}$ = dynamic range if system minimum detectable signal is known.

---

[2] Bernhard E. Keiser, Broadband Coding, Modulation, and Transmission Engineering, second edition, CEEPress Books, Continuing Engineering Education Program, George Washington University, 1994.

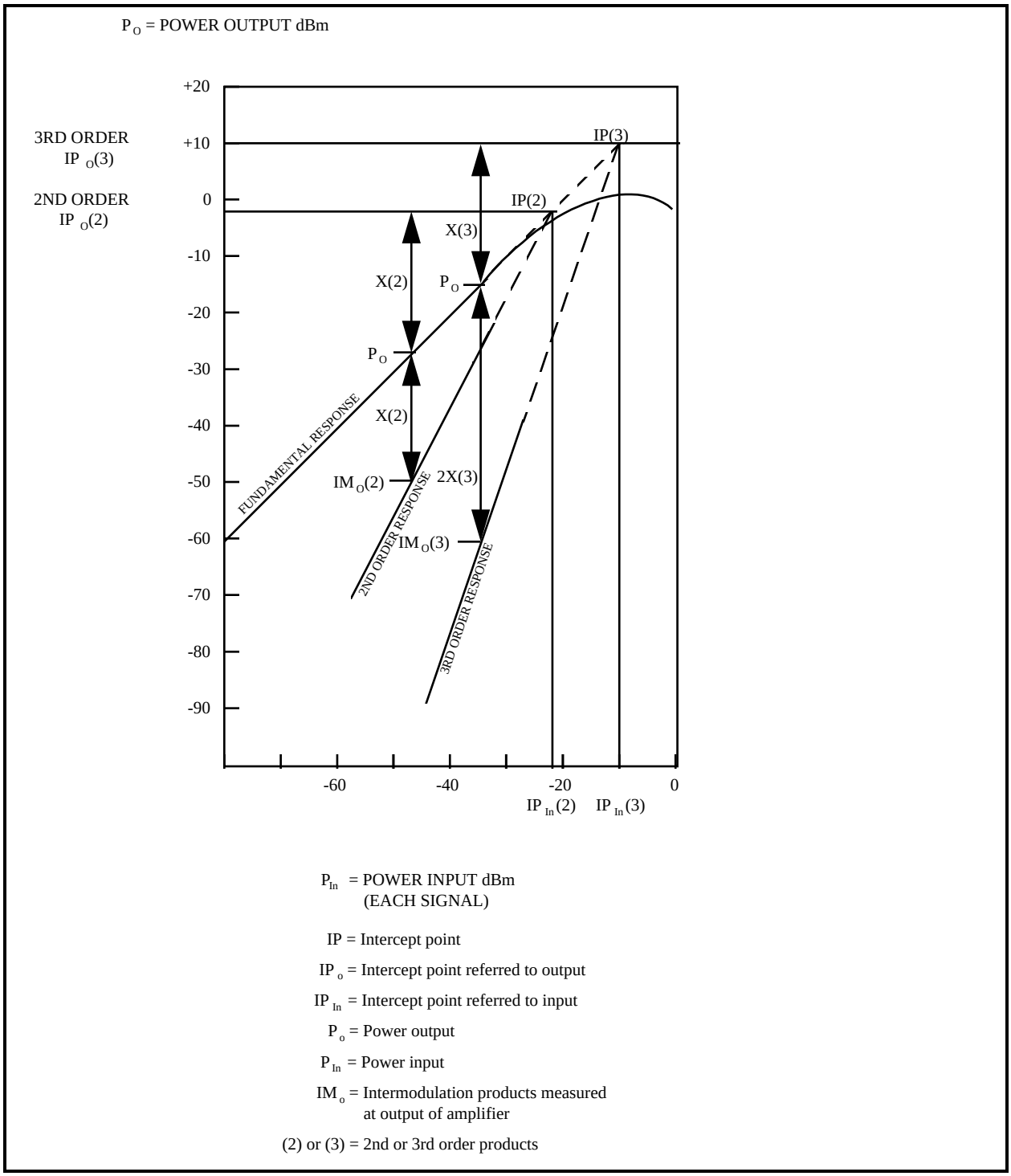

Figure A-2. Graphical representation of intercept point.

APPENDIX B

NOISE FIGURE MEASUREMENTS

B.1 General

The following discussion reveals several areas where special care and attention are necessary to obtain valid and meaningful noise figure measurements. The most common method for measuring noise figure, and the method which will be discussed here, is the automatic noise figure meter method. Automatic noise figure measurements are generally valid for noise figures ranging from about 3 dB to as much as 20 dB, if proper precautions and care are taken during the measurement process. This range of noise figure values will include all the telemetry RF components except very low noise preamplifiers. Measurement for that type of equipment is generally made using a laboratory environment and a hot-and-cold-source test method. Total RF system sensitivity can be evaluated using solar measurement methods.

B.1 Noise Power

The noise power at the output of a telemetry receiving system can be expressed by

$$N \propto k\, T_s\, B \qquad \text{(Eq. B-1)}$$

Where:

k = Boltzmann's constant = $1.38 \bullet 10^{-23}$ watts/Hz • ºK
Ts = *system noise temperature (ºK)*
B = system bandwidth (Hz)

The system noise power is proportional to the system noise temperature and the receiving system bandwidth. The best receiving system bandwidth can be determined from the data bandwidth, modulation type, and peak deviation. The actual bandwidth is determined by what receiver bandwidths are available. The sensitivity of a telemetry receiving system is ultimately determined by the amount of noise the system adds to the incoming signal. Consequently, the design of the receiving system must include every possible design consideration to minimize this added noise. To evaluate the design and quality of any receiving system, it is necessary to include measurement of its performance in terms of noise temperature or noise figure.

B.3 System Consideration

Several parameters in a receiving system are significant when determining the noise figure of that system. The first amplifier stage in the receiving system establishes the order of magnitude of the noise figure of the system; however, every component from the receiving system input terminals to its output will have an effect on the amount of noise added to a signal by the receiving system. Included are such parameters as cable loss, connector loss, impedance mismatch, insertion loss of passive devices (switches, filters, and directional couplers), and the noise introduced by all active devices within the receiving system.

B.4 Noise Figure Equation

At this point it is necessary to make a distinction between two forms of the term "noise figure. "Noise figure (NF_{db}) is expressed in decibels and noise factor (n_f) in decimal units. For example, a noise figure of 3 dB corresponds to a noise factor of 2. A noise figure calculation is the logarithm form of the numerical power ratio (that is, the noise factor). To eliminate possible confusion, equations (B-2) and (B-3) shows the relationship between the two.

$$NF_{dB} = 10 \bullet \log_{10}(n_f) \qquad \text{(Eq. B-2)}$$

$$n_f = 10^{(NF/10)} \qquad \text{(Eq. B-3)}$$

The equation for calculating the noise factor of an RF system or any series of networks in cascade follows:

$$n_s = n_1 + \frac{n_2 - 1}{g_1} + \frac{n_3 - 1}{g_1 g_2} \ldots + \frac{n_n - 1}{g_1 g_2 \cdots g_{n-1}} \qquad \text{(Eq. B-4)}$$

Where:

n_s = system noise factor
n1, n2, nn = noise factor of each stage
g_1, g_2, g_n = gain of each stage expressed in decimal units

For a lossy component, the noise factor is the reciprocal of the fractional gain at room temperature (for example 290º). The test setup should also have good impedance matching. From (B-2) and (B-3), the noise factor is equal to the loss, expressed as:

$$n_c = l_c \qquad \text{(Eq. B-5)}$$

$$n_c = 10^{(1dB/10)} = 1.2589$$

Equations (B-5) and (B-7) verify that the gain and noise figure of the initial amplifying stage in a receiving system has a significant effect on the noise figure of that system. As previously stated, the overall design and quality of construction can affect the system noise figure as well. The system in Figure B-1 with the RF system components located at some point separate from the antenna will have a worse noise figure than the system in Figure B-2 with the RF components located at the feed assembly output terminals. Substituting the values from Figure B-1 into equation (B-4) and using equation (B-2), the system noise figure can be determined. The equations assume the cable losses except C_1 are negligible.

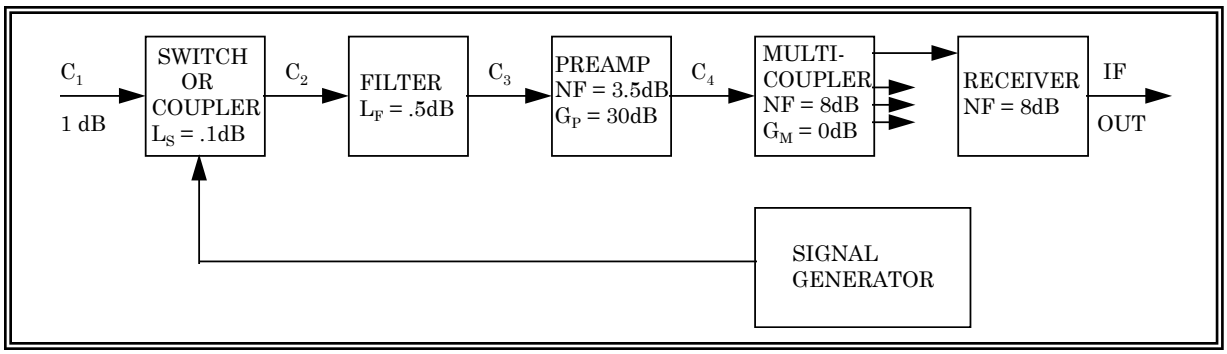

Figure B-1. Receiving system with filter before the preamplifier.

Equations (B-4) and (B-5) for Figure B-1 is as follows:

	cable	switch	filter	preamp	m/c	receiver
n =	nc_1	$+\frac{n_s-1}{g_{c1}}$	$+\frac{n_f-1}{g_{c1}g_s}$	$+\frac{n_p-1}{g_{c1}g_sg_f}$	$+\frac{n_m-1}{g_{c1}g_sg_fg_p}$	$+\frac{n_r-1}{g_{c1}g_sg_fg_pg_m}$

From (B-4) and (B-5),

$$n = n_{c1} + n_{c1}(n_s - 1) + n_{c1}\,n_s\,(n_f - 1) + n_{c1}\,n_s\,n_f\,(n_p - 1) + n_{c1}\,n_s\,n_f\,\frac{(n_m - 1)}{g_p} + n_{c1}\,n_s\,n_f\,\frac{(n_r - 1)}{g_p g_m}$$

Where:

n_{c1} = $10^{(1/10)}$ = 1.2589 (cable)
ns = 10(0.1 /10) = 1.02329 (switch)
nf = 10(0.5 / 10) = 1.122 (filter)
np = 10(3.5 / 10) = 2.2387 : gp = 10(30 / 10) = 1000 (preamp)
nm = 10(8 /10) = 6.3095 : gm = 100 / 10) = 1 (multicoupler)
nr = 10 (8 / 10) = 6.3095 (receiver)
n = 3.463
NF = 10 • log10 (3.463)
NF = 5.114 dB

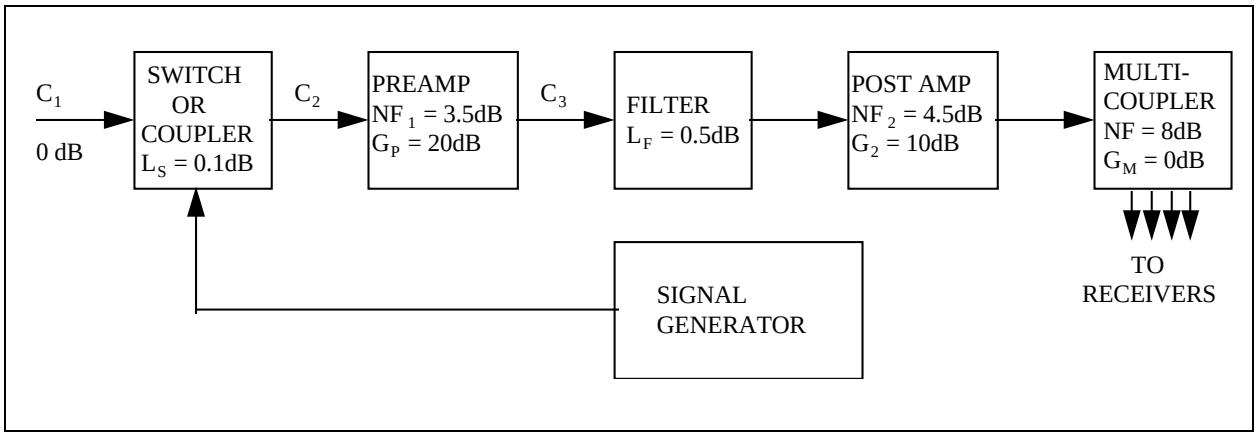

Figure B-2. Receiving system with filter after preamplifier.

When substituting the values from Figure B-2 into (B-5) we get:

$$n = n_{c1} + n_{c1}(n_s - 1) + n_{c1} n_s (n_p - 1) + n_{c1} n_s \frac{(n_f - 1)}{g_p} + n_{c1} n_s n_f \frac{(n_1 - 1)}{g_p} + n_{c1} n_s n_f \frac{(n_m - 1)}{g_p g_1}$$

$$+ n_{c1} n_s n_f \frac{(n_r - 1)}{g_p g_1 g_m}$$

Where:

$n_{c1} = 10^{(0/10)} = 1$ (cable c1)
ns = 10(0.1 /10) = 1.02329 (switch)
np = 10(3.5 /10) = 2.2387 : gp = 10(20 / 10) = 100 (preamp)
n1 = 10(4.5 /10) = 2.8194 : g1 = 10(10 / 10) = 10 (post amp)
nm = 10(8 /10) = 6.3095 : gm = 10(0 / 10) = 1 (multicoupler)
nr = 10(8 /10) = 6.3.95 (receiver)
n = 2.3252
NF = 10 • log10 (2.3252)
NF = 3.665 dB

This example underscores the importance of minimizing loss components ahead of the first amplifier stage. Placement of filters and calibration components, as well as long cable runs, should be given careful consideration in system design. Although, in this example, interconnecting cable losses were neglected. Long cable runs can have a significant impact on system performance. For an accurate noise factor calculation, the losses between stages should be included. This combined noise factor is, in turn, employed to determine the noise figure used in equation (B-2). The above calculations are based on room temperature (290 ºK) and correct impedance matching. For low noise figure components and amplifiers, the noise figure is not a useful approach. Instead, the effective noise temperature (T_e) should be used. The cascaded approach used for noise factor can also be used as indicated in the following equation:

$$T_e = \frac{T(1 - g_a)}{g_a} \qquad \text{(Eq. B-6)}$$

And

$$l = \frac{1}{g_a} \qquad \text{(Eq. B-7)}$$

Where:

T_e = effective noise temperature in Kelvin
T = component noise temperature
g_a = gain of the component (available loss of the component)
l = available loss (numeric equivalent of the dB value).

B.5 Noise Figure Measurements

Each brand of noise figure measuring equipment requires unique procedures and techniques for operation. The operations manual for the noise figure meter should be consulted before making measurements. A variety of precautions must be observed when making noise figure measurements with an automatic noise figure meter to avoid mistakes and to improve accuracy.

B.5.1 Noise Source. Noise figure measurements at telemetry frequencies most commonly employ a diode. However, older noise figure meters typically used a gas discharge tube. This device has characteristics that can damage sensitive amplifiers and degrade results. When the noise tube is initially turned on, it produces an output spike which is significant. Prior to turning on the noise source, it is necessary to disconnect it from the device under test. After it is turned on, it may be reconnected to the device under test. In operation, the noise tube is pulsed on and off. A high voltage ionizing pulse of several thousand volts is required. Capacitive coupling between the noise tube and the noise pickup coil allows these pulses to appear as spikes in the noise output at an amplitude of several volts. The use of an attenuator on the noise source output reduces these effects. The attenuator will also improve the VSWR match between the noise source and the device under test. Selection of this attenuator can be of further benefit to the operator. The accuracy of most automatic noise figure meters falls off when measuring noise figure below 2 or 3 dB. Since all attenuation ahead of an active device adds algebraically to the noise figure of that device, the use of a 10-dB attenuator will increase the measured noise figure by 10 and make subtracting this loss from the final reading easier. A 10-dB attenuator is also sufficient to protect most sensitive amplifiers from these spikes.

B.5.2 Excess Noise Ratio. Automatic noise figure meter accuracy is dependent upon the excess noise ratio (ENR) of the noise source being used. The meter provides a reading based on its calibration and the ENR of the source at the desired frequency. When the ENR of the source is different from that for which the meter was calibrated, a correction factor must be added to the meter reading. Some noise figure meters are calibrated during the measurement process for the noise source and frequency used. In these meters, no correction is required. The operator must always consult the operations manual to determine the correction factor for the source and frequency used.

B.5.3 Gain. Another common error in making noise figure measurements is the lack of appropriate gain within the test setup. Too much gain will saturate the noise figure meter and

cause an erroneous reading. Likewise, too little gain will affect the readings. The operations manual for the meter used should be consulted to obtain the proper input level for that meter. This condition is most effectively accomplished by placing an attenuator or amplifier in the output of the mixer stage, just ahead of the noise figure meter. A 60-dB step attenuator or a variable gain IF amplifier with up to 40-dB gain is sufficient for most applications.

B.5.4 Component Loss. Connectors and cables used in the test setup can cause many problems. Quality components must always be used to obtain quality test results from any test setup. In noise figure measurements, this statement is doubly true. Not only must components be first quality, they must be kept clean and tightened properly for accurate measurement. A Freon cleaner is preferred because lubricating contact cleaners attract dust and residue. All test cables should be carefully calibrated in the frequency range in which they are to be used. Cable losses will be added to the noise figure of the amplifier or receiver which they precede when making system noise figure calculations.

B.5.5 Image Response. When selecting the equipment for a noise figure test setup, it is important to choose a receiver or converter which has a high image rejection specification. The image response of the receiver adds significantly to the noise figure. The image error is given by equation B-8 below.

$$NF_1 = 10 \cdot \log_{10}\left(1 - \frac{g_i}{g_s}\right) \qquad \text{(Eq. B-8)}$$

Where:

g_i = *image response gain ratio*

g_s = *signal response gain ratio*

For receivers with an image rejection of 20 dB or greater, this error is negligible. If a standard telemetry receiver is used as the converter, the image error can usually be neglected, but with a mixer converter, it must be taken into account. The image error of a mixer converter can be improved by using a narrow band filter (5 MHz or less) at the input to the mixer. If the image rejection of the filter is greater than 20 dB, the image error can be neglected.

B.6 Measurement Setup

Connect the test equipment for laboratory measurements of component noise figure as shown in Figure B-3. Noise figure measurements on telemetry equipment are generally made easier by using a standard telemetry receiver as the mixer-converter stage. The telemetry receiver eliminates image errors and the necessity for making frequency measurements on the local oscillator. Most telemetry receivers have an IF output at the noise figure meter input frequency. Use of the first IF output is generally preferred because of the elimination of the second IF mixer and amplifiers. If a separate mixer converter and local oscillator are preferred, they will be connected as shown in Figure B-4.

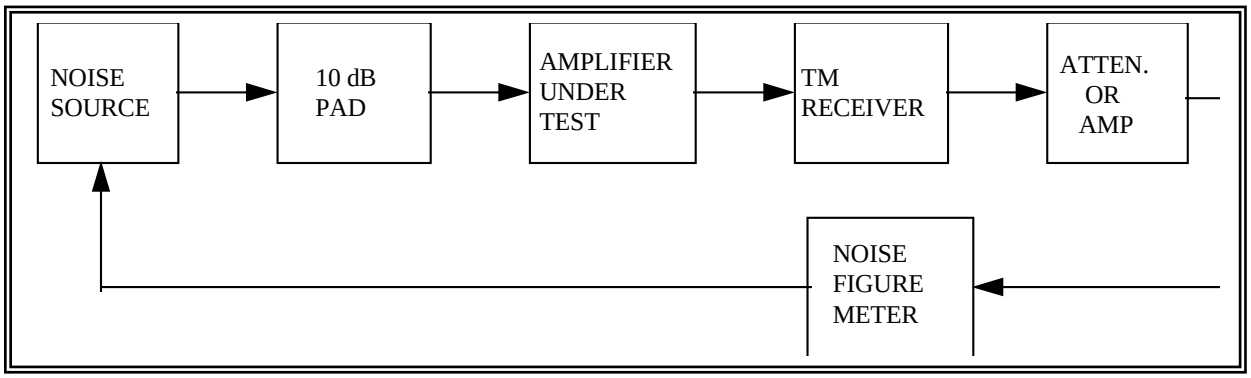

Figure B-3. Noise figure measurement using telemetry receiver.

Note: The 10-dB pad is optional if a noise diode is used.

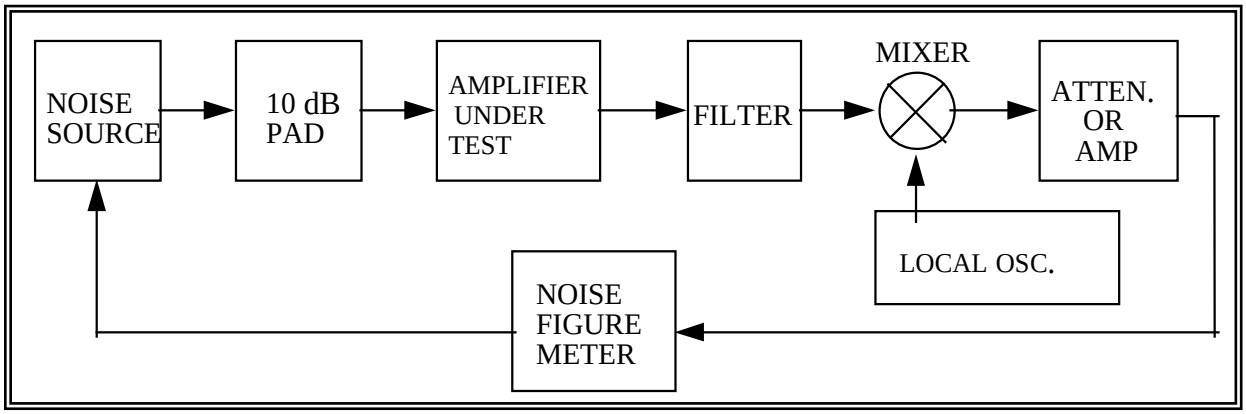

Figure B-4. Noise figure using filter, mixer, and oscillator.

Note: The 10-dB pad is optional if a noise diode is used.

	This connection should not be made until after the noise source is turned on. If this connection is made prior to turning on the noise source, the noise spikes discussed previously may damage the amplifier.

The equipment should be assembled and connected as shown except for the connection between the noise source and the amplifier under test. All equipment except the noise source should be allowed to warm-up for at least 30 minutes. The noise source should not be turned on until measurements are to be made. The noise source should also be turned off when no measurements are taken for 10 or more minutes. If the noise tube is allowed to become hot, an error will be introduced. Noise figure readings above 2 dB will not be affected if the noise source remains near room temperature.

B.7 Measurement Procedure

The first step in making noise figure measurements involves calibrating the system. This calibration is accomplished by replacing the amplifier under test with a jumper or barrel connector. Connect the jumper between the 10-dB pad and the next stage (in this case, a TM receiver). Turn the noise source on. Employing the manufacturer's procedures for the noise figure meter used, measure the noise figure. Take care to ensure that the attenuator or amplifier following the receiver is adjusted to provide the proper AGC voltage output from the noise figure meter. Record the measured noise figure in dB. The noise factor for the calibration setup is determined as follows:

$$n_{N/A} = n_P + n_P(n_2 - 1)$$

$$n_P\,(n_2 - 1) = n_{N/A} - n_p \qquad \text{(Eq. B-9)}$$

Where:

$n_{N/A}$ = *noise factor of system with no amplifier*
n_P = *noise factor of pad (10-dB pad in this case)*
n_2 = *noise factor of next stage*

With the noise source off and disconnected, place the amplifier under test in the test setup in place of the jumper. Turn on the noise source and connect it to the 10-dB pad. Again, ensure a proper noise figure meter AGC output and measure and record the noise figure. This reading will be the "system" noise figure (NF_s). Equations (B-2), (B-4) and (B-5) are now used to determine the noise factor (n_1), and the noise figure (NF_1) of the amplifier under test.

$$n_S = n_P + n_p(n_{amp} - 1) + \frac{n_p(n_2 - 1)}{g_{amp}} \qquad \text{(Eq. B-10)}$$

By substitution:

$$n_S = n_P = n_P(n_{amp} - 1) + \frac{(n_{N/A} - n_p)}{g_{amp}} \qquad \text{(Eq. B-11)}$$

$$n_{amp} = \frac{n_S}{n_P} - 1\frac{(n_{N/A} - n_P)}{g_{amp}} \qquad \text{(Eq. B-12)}$$

The noise figure for the amplifier can now be determined by:

$$NF = 10 \cdot \log_{10} (n_{amp}) \qquad \text{(Eq. B-13)}$$

Where:

n_P = pad attenuation (10-dB)
$n_{N/A}$ = noise factor without amplifier
n_{amp} = noise factor of amplifier : g_{amp} = gain factor of amplifier
n_2 = noise factor of stage following the amplifier

If proper care has been taken to avoid the problem areas discussed previously, NF_1 will be the noise figure of the amplifier under test within the accuracy of the noise figure meter used.

B.8 Summary

Noise figure is a helpful tool in the design and evaluation of telemetry RF systems. The precautions necessary to make valid noise figure measurements are also necessary in the design of a quality RF system. By being aware of these problem areas, both the engineer and technician can do a better job. Careful measurement of the noise figure and gain of each active component, and the loss of each passive component (including cables and connectors), will enable calculation and determination of the system noise figure prior to making system measurements. A measured system noise figure, different from that calculated, usually indicates the existence of one or more of the problem areas discussed. Periodic noise figure measurements of at least twice a year can show a trend leading to a component failure. The frequent measurements of G/T can serve as a guide for deciding how often noise figure measurements should be made. Potential failures can be avoided by identifying such trends.

APPENDIX C

SOLAR CALIBRATION

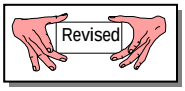

C.1 General

The solar calibration test is used as a basis for system calibration, go/no-go status, and trouble shooting of operational telemetry ground receiving systems. One of the primary advantages of the solar calibration test is the availability of the sun as a radiation source and its applicability to nearly any antenna with a 4-foot or larger aperture. For large aperture antennas, aperture correction is required because the sun can no longer be treated as a point source.

C.2 Solar Calibration Technique

The solar calibration technique uses a measurement of the ratio (T_{sun} / T_s) to calculate receiving system sensitivity, where T_{sun} is the antenna noise temperature referred to the antenna terminals because of the sun, and T_s is the antenna system noise temperature.

By definition,

$$T_{sun} = \frac{S\lambda^2 G_r}{8\pi k k_2 L} \qquad \text{(Eq. C-1)}$$

Or

$$\frac{T_{sun}}{T_S} = \frac{S\lambda^2 G_r}{8\pi k k_2 L T_S} \qquad \text{(Eq. C-2)}$$

And

$$\frac{G_r}{T_S} = \frac{8\pi k k_2 L T_{sun}}{S\lambda^2 T_S} \quad \text{Figure of Merit)} \qquad \text{(Eq. C-3)}$$

Where:

- G_r = gain of the receiving antenna
- λ = test frequency wavelength (meters) ($300/f_t$)
- L = aperture correction factor
- T_s = system noise temperature
- k = Boltzmann's constant ($1.380622 \cdot 10^{-23}$ watts Hz^{-1} $^oK^{-1}$)
- k_2 = correction factor for atmospheric attenuation
- S = solar power flux density (random polarization) in watts m^{-2} Hz^{-1} at the test time and at the test frequency
- f_t = test frequency (MHz)

NOTE	Solar power flux density measurements are made daily at the Sagamore Hill Radio Observatory at 1415 and 2695 MHz. It is advisable to specify the lower and upper frequency when requesting solar flux readings. Contact Information: DSN 272-8087 or commercial (402) 232-8087 Internet: http://www.swpc.noaa.gov/ftpdir/lists/radio/rad.txt

To convert the power flux density measurements into flux densities at the test frequencies, use the following equations:

$$S = \left[\frac{S_{1415}}{S_{2695}}\right]^{\Gamma} \bullet S_{2695} \qquad \text{(Eq. C-4)}$$

Where:

$$\Gamma = \frac{Log_{10}\left[\frac{f_t}{2695}\right]}{Log_{10}\left[\frac{1415}{2695}\right]} \qquad \text{(Eq. C-5)}$$

S = corrected power flux density at the test frequency
S_{2695} = measured power flux density at 2695 MHz
S_{1415} = measured power flux density at 1415 MHz

NOTE	Equation C-5 assumes that the test frequency is between 1415 MHz and 2695 MHz.

The units of the measured power flux densities are 10^{-22} watts/meter^2/Hz. A reported value of 111 would mean $111 \bullet 10^{-22}$ watts/meter^2/Hz.

Aperture correction depends on the ratio of the angular size of the sun and the 3-dB beam width of the antenna. For simultaneous lobing, the following equation applies:

$$L = 1 + 0.18\left[\frac{\Phi_d}{\Phi_h}\right]^2 \quad for \quad \frac{\Phi d}{\Phi h} \le 1 \qquad \text{(Eq. C-6)}$$

Where:
Φ_d = angle subtended by the sun (approximately 0.53º)
Φ_h = 3-dB beam width of the sum channel

For con-scan antennas (when used with con-scan OFF), the following equation applies:

$$L = \left[1 + 0.38 \left[\frac{\Phi d}{\Phi} \right] \left[\frac{\frac{P_M}{P} - 1}{\frac{P_T}{P_1} - 1} \right] \right] \quad \text{(Eq. C-7)}$$

Where:

Φd = *angle subtended by the sun*
Φh = *3-dB beam width of the antenna with the con-scan OFF*
PM = *maximum IF output power, antenna on sun with con-scan OFF*
PT = *maximum IF output power, antenna on the sun with con-scan ON*
P = *IF output power, antenna on cold sky with con-scan OFF*
P1 = *IF output power, antenna on cold sky with con-scan ON*

Equation C-6 should be used to calculate the aperture correction factor when con-scan is ON.

The correction factor for atmospheric attenuation is represented as:

$$K_2 = A_g / \sin \alpha \text{ (units in dB)} \quad \text{(Eq. C-8)}$$

Where:

A_g = gaseous absorption in the atmosphere in dB (0.033 dB for L-band and 0.035 dB for S-band.[9])
α = elevation angle

or:

$$k_2 = 10^{Ag / (10 \cdot \sin(\alpha))} \text{(numeric)} \quad \text{(Eq. C-9)}$$

The signal-to-noise ratio (SNR) at the receiver final IF output is dependent on the received signal power (J_a), the gain of the receiving antenna (G_r) and the system noise temperature (T_s). The relationship between the SNR and *G/T* is

$$\text{SNR} = \frac{J_a \lambda^2 G_r}{4\pi k k_2 B T_S} \qquad \text{(Eq. C-10)}$$

Where:

k = Boltzmann's constant ($1.380622 \cdot 10^{-23}$ watts Hz^{-1} $^oK^{-1}$)
k2 = *correction factor for atmospheric attenuation*
B = *noise bandwidth of the final IF*
Ja = *RF signal power flux density (watts/meter2)*
λ = *test frequency wavelength (meters)*
Gr = *gain of receiving antenna*
Ts = system noise temperature

Therefore, by performing the solar calibration test, the figure of merit of the antenna system can be determined, and the SNR at the output of the final IF can be calculated.

C.3 Test for Receiving System Linearity

This test should be performed to determine if the telemetry system is linear from the input to the preamplifier through the power meter (or true rms voltmeter).

Set up the receiving system as shown in Figure C-1.

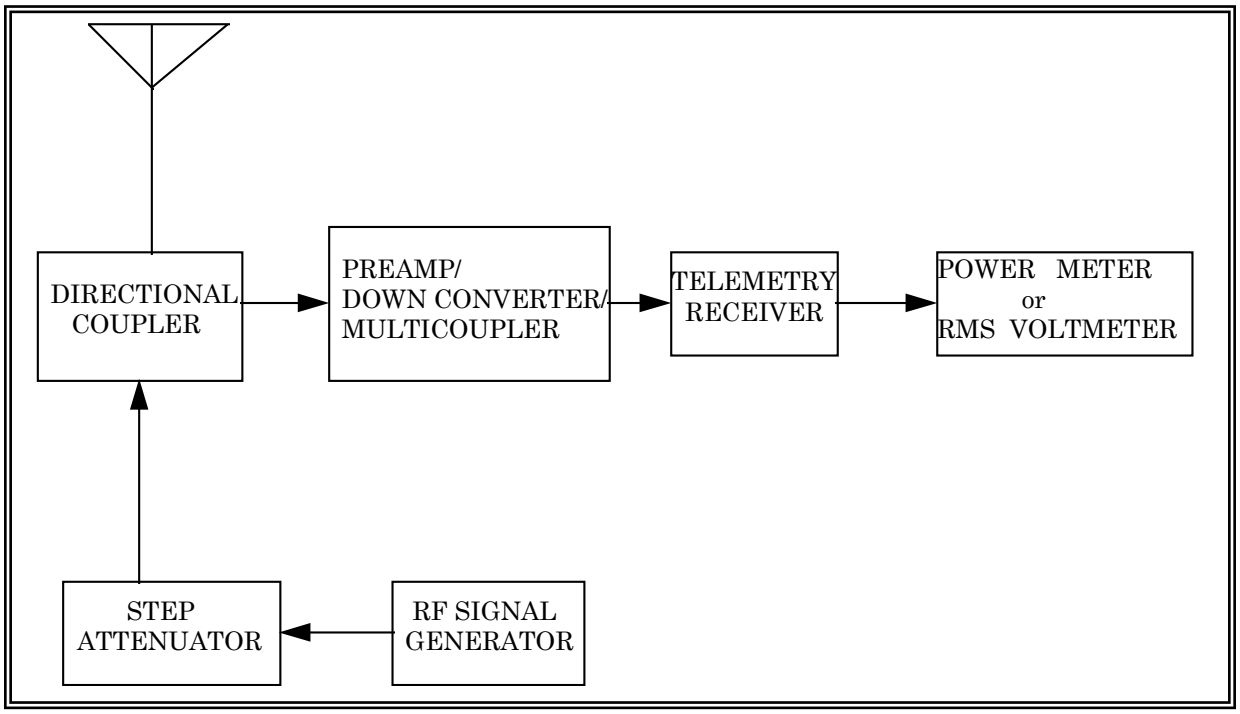

Figure C-1. Block diagram for system linearity test.

Point the antenna at the cold sky (at least several beam widths away from the sun with an elevation angle greater than 50°). Set the output of the signal generator to the minimum level and the attenuator to maximum attenuation. Verify that no extraneous radio sources are present. Set the manual gain control so that the linear IF output is approximately equal to the output under AGC control. Record the power meter (or true rms voltmeter) reading (P_n or V_n as appropriate) in decibels.

Let P_1 (V_1) represent the power meter (or true rms voltmeter) reading. The signal generator output is set to minimum level $P_1 = P_n$ ($V_1 = V_n$).

Set the step attenuator to 5-dB attenuation. Increase the signal generator output power until the power meter (or true rms voltmeter) reading has increased by approximately 3 dB. Record the power meter (or true rms voltmeter) reading (in dB). Decrease the attenuator in 1-dB steps and record the power meter (or true rms voltmeter) readings.

To test for linearity, plot $10 \log_{10} (10^x - 1)$ (IF SNR) versus change in power at attenuator output (actual attenuation not attenuator setting) where x is the increase in power meter (or true rms voltmeter) reading (in dB) relative to P_n divided by 10; that is, $x = (P_1 - P_n) / 10$. A sample plot is shown in Figure C-2. The maximum departure from a unity slope line should not exceed 0.5 dB.

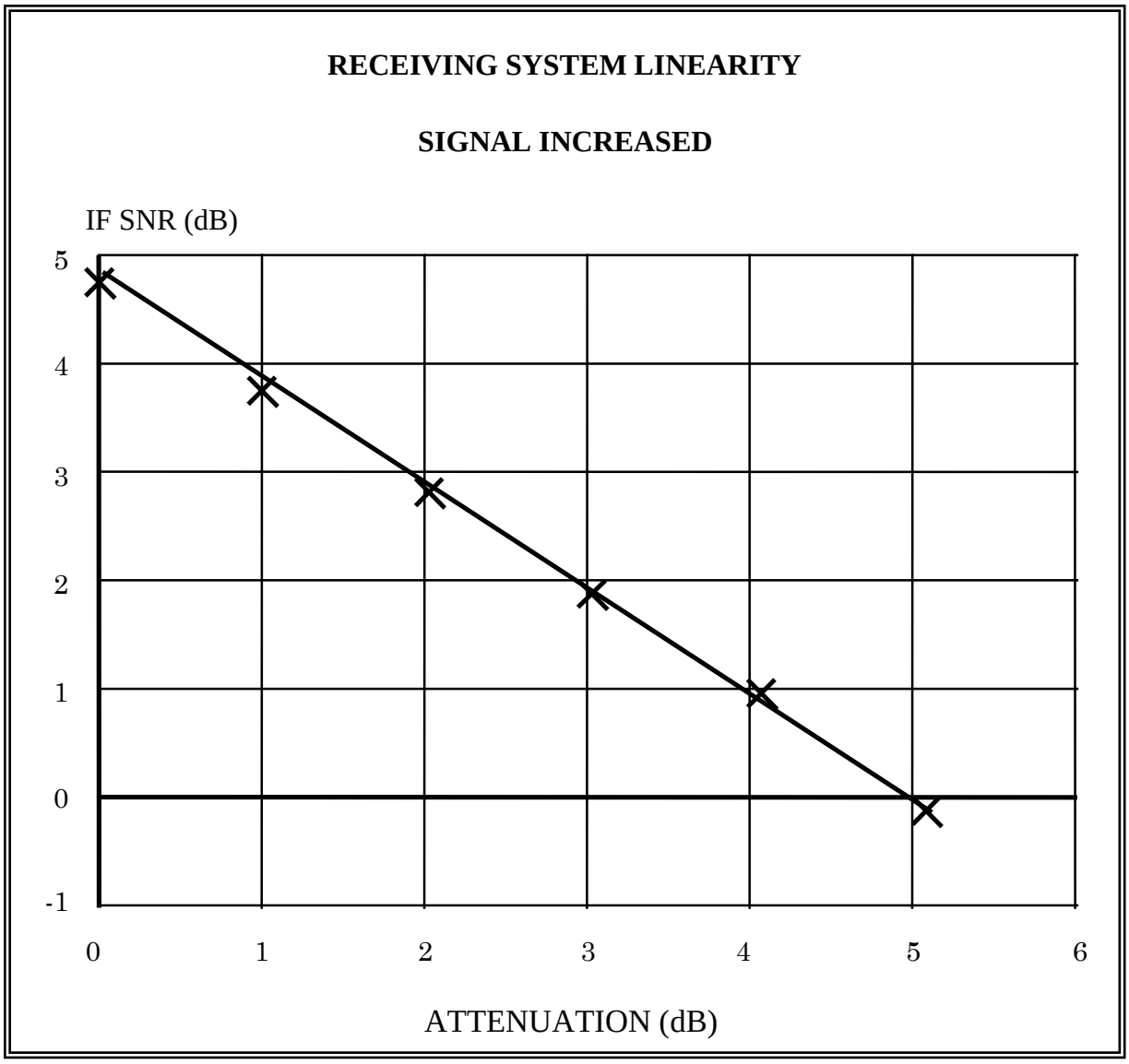

Figure C-2. IF SNR versus attenuation.

REFERENCES

1. Kraus, J. D., Radio Astronomy, McGraw-Hill Book Company, New York, 1966.

2. Ghais, et. al., Study of Telemetry Recorder Phase Linearity Problems, ESD-TR 66-409, August 1966, ASCOM, Inc., Electronic Systems Division, AFSC Contract AF 19(628)5655, DDC No. AD 638685.

3. Proceedings of the 1967 International Telemetry Conference, Phase Linearity in Telemetry Reception , pp26.

4. Range Commanders Council, Telemetry Group, Telemetry Standards, Document 106-96.

5. Hedeman, W. R., Proceedings of the 1968 International Telemetry Conference, The Sum as a Calibration Signal Source for L- and S- Band Telemetry.

6. Ko, H,C., On the Determination of the Disk Temperature and the Flux Density of a Radio Source Using High Gain Antennas, Institute of Radio Engineers Transactions PGAP, September 1961, pp 500-601.

7. P. A. Guidice and J.P. Castelli, The Use of Extraterrestrial Radio Sources in the Measurement of Antenna Parameters, Institute of Electrical and Electronics Engineers Transactions on Aerospace and Electronic System, Vol. 2, March 1971.

8. Freeman R. L., Telecommunication Transmission Handbook, 6th ed., Wiley InterScience, 1991.

9. International Consultative Committee for Radio (CCIR), Attenuation by Atmospheric Gases, International Consultative Committee for Radio (CCIR) Study Group Report 719, 1978.

INDEX OF TESTS

AGC dynamic - response to sine wave 4-22
AGC dynamic - response to square wave 4-16
AGC static 4-12
Amplifier gain compression 2-2
Antenna boresight 1-23
Antenna gain 1-25
Antenna pattern 1-30
Automatic gain control stability 4-67

Bandwidth and passband gain characteristics 6-5
Bandwidth and small signal power gain 2-8, 3-5

Channel isolation 6-19
Combiner data frequency response 5-37
Combiner predetection carrier output 5-41

Data frequency response 4-64
Diversity combiner break frequency 5-27
Diversity combiner dynamic evaluation with in-phase fading and equal RF signal strengths 5-11
Diversity combiner dynamic evaluation with periodic in-phase fading and unequal RF signal strengths 5-18
Diversity combiner dynamic evaluation with periodic out-of-phase fading and equal RF signal strengths 5-22
Diversity combiner dynamic evaluation with periodic out-of-phase fading and unequal RF signal strengths 5-24
Diversity combiner evaluation with random fading 5-29
Diversity combiner static evaluation with equal RF signal strengths 5-2
Diversity combiner static evaluation with unequal RF Signal Strengths 5-7
Dynamic tracking accuracy 1-20

Feed assembly unit 1-33
FM capture ratio 4-26
FM receiver dc linearity and deviation sensitivity 4-77
bit rate and input frequency tracking 7-8
demodulator acquisition time and flat fade recovery time 7-11
demodulator adjacent channel interference test. 7-15
demodulator bit error probability versus Eb/N 7-1
re-acquisition and synchronization loss thresholds 7-6
Frequency modulation step response 4-49

Gain compression and saturation level 6-2

Image rejection 6-25
Impedance mismatch 2-31
Intermediate frequency signal-to-noise ratio 4-9

Intermodulation products and intercept point 2-12
Intermodulation products and intercept point 6-8
Intermodulation products intercept point 3-9

Local oscillator frequency accuracy and stability 6-28
Local oscillator radiation 4-37
Local oscillator radiation test 6-31
Local oscillator stability 4-40

Multicoupler gain compression 3-1

Noise figure 3-22
Noise figure (downconverters) 6-16
Noise figure (receivers) 4-6
Noise figure using automatic noise figure meter 2-23
Noise figure using hot and cold sources 2-26
Noise power ratio 4-30

Output isolation 3-25

Position loop 1-9
Position loop calibration 1-6
Predetection carrier output 4-74
Predetection combiner band pass frequency response using phase-modulated signal 5-30
Predetection combiner band pass frequency response using unmodulated signal 5-34
Pulse code modulation bit error rate 4-44

Rate loop 1-2
Receiver adjacent channel interference 4-85
Receiver band pass frequency response using phase-modulated signal 4-56
Receiver band pass frequency response using unmodulated signal 4-52
Receiver band pass frequency response using white noise input 4-61
Receiver phase noise 4-82
Receiver video spurious outputs 4-70

Solar calibration using attenuator method 1-41
Solar calibration using linear receiver method 1-36
Spurious signal 6-22
Spurious signal response 4-3

Tracking error voltage gradient 1-16

Velocity/acceleration measurement using strip chart recorder 1-12
Voltage standing wave ratio 6-13
Voltage standing wave ratio by return loss method 2-18
VSWR by return loss method 3-16